1. ALL RESISTANCE VALUES ARE IN OHMS, 0.1 WATT +/- 5%.
2. ALL CAPACITANCE VALUES ARE IN MICROFARADS.
3. ALL CRYSTALS & OSCILLATOR VALUES ARE IN HERTZ.

REV	ECN	DESCRIPTION OF REVISION	CK APPD / DATE
5	0006232160	ENGINEERING RELEASED	2016-05-16

D111/121 MLB - Carrier

LAST_MODIFICATION=Mon May 16 22:31:09 2016

PAGE	<CSA>	CONTENTS	SYNC	DATE
1	<CSA_PAGE1>	TABLE OF CONTENTS	<SYNC_MASTER1>	<SYNC_DATE1>
2	<CSA_PAGE2>	SYSTEM:BOM TABLES	<SYNC_MASTER2>	<SYNC_DATE2>
3	<CSA_PAGE3>	SYSTEM:EEEE CALLOUTS	<SYNC_MASTER3>	<SYNC_DATE3>
4	<CSA_PAGE4>	SYSTEM:MECHANICAL COMPONENTS	<SYNC_MASTER4>	<SYNC_DATE4>
5	<CSA_PAGE5>	SYSTEM:TESTPOINTS, BOARDID	<SYNC_MASTER5>	<SYNC_DATE5>
6	<CSA_PAGE6>	spare	<SYNC_MASTER6>	<SYNC_DATE6>
7	<CSA_PAGE7>	SOC:JTAG,USB,XTAL	<SYNC_MASTER7>	<SYNC_DATE7>
8	<CSA_PAGE8>	SOC:PCIE	<SYNC_MASTER8>	<SYNC_DATE8>
9	<CSA_PAGE9>	SOC:MIPI AND ISP	<SYNC_MASTER9>	<SYNC_DATE9>
10	<CSA_PAGE10>	SOC:LPDP	<SYNC_MASTER10>	<SYNC_DATE10>
11	<CSA_PAGE11>	SOC:SERIAL	<SYNC_MASTER11>	<SYNC_DATE11>
12	<CSA_PAGE12>	SOC:GPIO & UART	<SYNC_MASTER12>	<SYNC_DATE12>
13	<CSA_PAGE13>	SOC:AOP	<SYNC_MASTER13>	<SYNC_DATE13>
14	<CSA_PAGE14>	SOC:POWER (1/3)	<SYNC_MASTER14>	<SYNC_DATE14>
15	<CSA_PAGE15>	SOC:POWER (2/3)	<SYNC_MASTER15>	<SYNC_DATE15>
16	<CSA_PAGE16>	SOC:POWER (3/3)	<SYNC_MASTER16>	<SYNC_DATE16>
17	<CSA_PAGE17>	NAND	<SYNC_MASTER17>	<SYNC_DATE17>
18	<CSA_PAGE18>	SYSTEM POWER:PMU (1/3)	<SYNC_MASTER18>	<SYNC_DATE18>
19	<CSA_PAGE19>	SYSTEM POWER:PMU (2/3)	<SYNC_MASTER19>	<SYNC_DATE19>
20	<CSA_PAGE20>	SYSTEM POWER:PMU (3/3)	<SYNC_MASTER20>	<SYNC_DATE20>
21	<CSA_PAGE21>	SYSTEM POWER:CHARGER	<SYNC_MASTER21>	<SYNC_DATE21>
22	<CSA_PAGE22>	SYSTEM POWER:BATTERY CONN	<SYNC_MASTER22>	<SYNC_DATE22>
23	<CSA_PAGE23>	SYSTEM POWER:BOOST	<SYNC_MASTER23>	<SYNC_DATE23>
24	<CSA_PAGE24>	SENSORS	<SYNC_MASTER24>	<SYNC_DATE24>
25	<CSA_PAGE25>	B2B FILTERS: UTAH	<SYNC_MASTER25>	<SYNC_DATE25>
26	<CSA_PAGE26>	CAMERA:STROBE DRIVER	<SYNC_MASTER26>	<SYNC_DATE26>
27	<CSA_PAGE27>	Accessory: Buck Circuit	<SYNC_MASTER27>	<SYNC_DATE27>
28	<CSA_PAGE28>	TRINITY:FF SPECIFIC	<SYNC_MASTER28>	<SYNC_DATE28>
29	<CSA_PAGE29>	B2B:FOREHEAD	<SYNC_MASTER29>	<SYNC_DATE29>
30	<CSA_PAGE30>	B2B:NEVADA	<SYNC_MASTER30>	<SYNC_DATE30>
31	<CSA_PAGE31>	AUDIO:CALTRA CODEC (1/2)	<SYNC_MASTER31>	<SYNC_DATE31>
32	<CSA_PAGE32>	AUDIO:CALTRA CODEC (2/2)	<SYNC_MASTER32>	<SYNC_DATE32>
33	<CSA_PAGE33>	AUDIO:SPEAKER AMP 2	<SYNC_MASTER33>	<SYNC_DATE33>
34	<CSA_PAGE34>	AUDIO:SPEAKER AMP 1	<SYNC_MASTER34>	<SYNC_DATE34>
35	<CSA_PAGE35>	ARC:DRIVER	<SYNC_MASTER35>	<SYNC_DATE35>
36	<CSA_PAGE36>	ARC:MAGGIE	<SYNC_MASTER36>	<SYNC_DATE36>
37	<CSA_PAGE37>	DISPLAY & MESA:POWER	<SYNC_MASTER37>	<SYNC_DATE37>
38	<CSA_PAGE38>	B2B:ORB & MESA	<SYNC_MASTER38>	<SYNC_DATE38>
39	<CSA_PAGE39>	B2B FILTERS: DISPLAY & TOUCH	<SYNC_MASTER39>	<SYNC_DATE39>
40	<CSA_PAGE40>	TRISTAR 2	<SYNC_MASTER40>	<SYNC_DATE40>
41	<CSA_PAGE41>	B2B:DOCK FLEX	<SYNC_MASTER41>	<SYNC_DATE41>
42	<CSA_PAGE42>	spare	<SYNC_MASTER42>	<SYNC_DATE42>
43	<CSA_PAGE43>	spare	<SYNC_MASTER43>	<SYNC_DATE43>
44	<CSA_PAGE44>	B2B FILTERS: RIGHT BUTTON FLEX	<SYNC_MASTER44>	<SYNC_DATE44>
45	<CSA_PAGE45>	B2B FF SPECIFIC	<SYNC_MASTER45>	<SYNC_DATE45>
46	<CSA_PAGE46>	LARGE FORM FACTOR SPECIFIC	<SYNC_MASTER46>	<SYNC_DATE46>
47	<CSA_PAGE47>	I2C MAP: AP, TOUCH, HOMER, I2C5	<SYNC_MASTER47>	<SYNC_DATE47>
48	<CSA_PAGE48>	I2C MAP AOP	<SYNC_MASTER48>	<SYNC_DATE48>
49	<CSA_PAGE49>	I2C TABLE	<SYNC_MASTER49>	<SYNC_DATE49>
50	<CSA_PAGE50>	spare	<SYNC_MASTER50>	<SYNC_DATE50>
51	<CSA_PAGE51>	spare	<SYNC_MASTER51>	<SYNC_DATE51>
52	<CSA_PAGE52>	MLB UNIQUE	<SYNC_MASTER52>	<SYNC_DATE52>
53	<CSA_PAGE53>	CELL,WIFI,NFC	<SYNC_MASTER53>	<SYNC_DATE53>
54	<CSA_PAGE54>	PAGE1	<SYNC_MASTER54>	<SYNC_DATE54>
55	<CSA_PAGE55>	BASEBAND	<SYNC_MASTER55>	<SYNC_DATE55>
56	<CSA_PAGE56>	BASEBAND MEMORY/DEBUG	<SYNC_MASTER56>	<SYNC_DATE56>
57	<CSA_PAGE57>	BASEBAND POWER	<SYNC_MASTER57>	<SYNC_DATE57>
58	<CSA_PAGE58>	BASEBAND PMIC	<SYNC_MASTER58>	<SYNC_DATE58>
59	<CSA_PAGE59>	TRANSCEIVERS	<SYNC_MASTER59>	<SYNC_DATE59>
60	<CSA_PAGE60>	ET MODULATOR	<SYNC_MASTER60>	<SYNC_DATE60>
61	<CSA_PAGE61>	TDD TRANSMIT	<SYNC_MASTER61>	<SYNC_DATE61>
62	<CSA_PAGE62>	FDD TRANSMIT	<SYNC_MASTER62>	<SYNC_DATE62>
63	<CSA_PAGE63>	PRIMARY RECEIVE	<SYNC_MASTER63>	<SYNC_DATE63>
64	<CSA_PAGE64>	LOWER ANTENNA & COUPLERS	<SYNC_MASTER64>	<SYNC_DATE64>
65	<CSA_PAGE65>	DIVERSITY RECEIVE ASM'S	<SYNC_MASTER65>	<SYNC_DATE65>
66	<CSA_PAGE66>	DIVERSITY RECEIVE LNA'S	<SYNC_MASTER66>	<SYNC_DATE66>
67	<CSA_PAGE67>	UPPER ANTENNA FEEDS	<SYNC_MASTER67>	<SYNC_DATE67>
68	<CSA_PAGE68>	GNSS	<SYNC_MASTER68>	<SYNC_DATE68>
69	<CSA_PAGE69>	TEST POINTS & SIM	<SYNC_MASTER69>	<SYNC_DATE69>
70	<CSA_PAGE70>	spare	<SYNC_MASTER70>	<SYNC_DATE70>
71	<CSA_PAGE71>	spare	<SYNC_MASTER71>	<SYNC_DATE71>
72	<CSA_PAGE72>	spare	<SYNC_MASTER72>	<SYNC_DATE72>
73	<CSA_PAGE73>	spare	<SYNC_MASTER73>	<SYNC_DATE73>
74	<CSA_PAGE74>	page1	<SYNC_MASTER74>	<SYNC_DATE74>
75	<CSA_PAGE75>	NFC	<SYNC_MASTER75>	<SYNC_DATE75>
76	<CSA_PAGE76>	page1	<SYNC_MASTER76>	<SYNC_DATE76>
77	<CSA_PAGE77>	METROCIRC	<SYNC_MASTER77>	<SYNC_DATE77>
78	<CSA_PAGE78>	UAT MATCH & TUNER	<SYNC_MASTER78>	<SYNC_DATE78>
79	<CSA_PAGE79>	WIFI_MLB SCHEMATIC	<SYNC_MASTER79>	<SYNC_DATE79>
80	<CSA_PAGE80>	PERENNIAL	<SYNC_MASTER80>	<SYNC_DATE80>
81	<CSA_PAGE81>	WIFI FRONT-END [77]	<SYNC_MASTER81>	<SYNC_DATE81>
	<CSA_PAGE82>		<SYNC_MASTER82>	<SYNC_DATE82>
	<CSA_PAGE83>		<SYNC_MASTER83>	<SYNC_DATE83>
	<CSA_PAGE84>		<SYNC_MASTER84>	<SYNC_DATE84>
	<CSA_PAGE85>		<SYNC_MASTER85>	<SYNC_DATE85>
	<CSA_PAGE86>		<SYNC_MASTER86>	<SYNC_DATE86>
	<CSA_PAGE87>		<SYNC_MASTER87>	<SYNC_DATE87>
	<CSA_PAGE88>		<SYNC_MASTER88>	<SYNC_DATE88>
	<CSA_PAGE89>		<SYNC_MASTER89>	<SYNC_DATE89>
	<CSA_PAGE90>		<SYNC_MASTER90>	<SYNC_DATE90>

TABLE OF CONTENTS

SCH 051-00542
BRD 820-00249
MCO 056-01585

Schematic & PCB Callouts

PART#	QTY	DESCRIPTION	REFERENCE DESIGNATOR(S)	CRITICAL	BOM OPTION
051-00542	1	SCH,MLB,D111/121	SCH	CRITICAL	?
820-00249	1	PCBF,MLB,D111/121	PCB	CRITICAL	?

System Block Diagram

<rdar://problem/16684269>

DRAWING TITLE: SCH,MLB,D111

Apple Inc.

DRAWING NUMBER: 051-00542 SIZE: D

REVISION: 5.0.0

BRANCH

PAGE: 1 OF 53

SHEET: 1 OF 81

NOTICE OF PROPRIETARY PROPERTY:
THE INFORMATION CONTAINED HEREIN IS THE PROPRIETARY PROPERTY OF APPLE INC.
THE POSESSOR AGREES TO THE FOLLOWING:
I TO MAINTAIN THIS DOCUMENT IN CONFIDENCE
II NOT TO REPRODUCE OR COPY IT
III NOT TO REVEAL OR PUBLISH IT IN WHOLE OR PART
IV ALL RIGHTS RESERVED

NAND BOM Options

PART#	QTY	DESCRIPTION	REFERENCE DESIGNATOR(S)	CRITICAL	BOM OPTION
335S00169	1	NAND,H,32GB,16nm,MLC	U1701	CRITICAL	NAND_32G
335S00182	1	NAND,H,128GB,16nm,TLC	U1701	CRITICAL	NAND_128G
335S00156	1	NAND,H,256GB,3Dv3,TLC	U1701	CRITICAL	NAND_256G
138S0867	6	CAP,X5R,10uF,20%,6.3V,0.65MM,HRZTL,0402	C1748,C1713,C1716,C1719,C1721,C1733	CRITICAL	NAND_32G
138S00003	6	CAP,X5R,15uF,20%,,6.3V,0.65MM,HRZTL,0402	C1748,C1713,C1716,C1719,C1721,C1733	CRITICAL	NAND_128G
138S00003	6	CAP,X5R,15uF,20%,,6.3V,0.65MM,HRZTL,0402	C1748,C1713,C1716,C1719,C1721,C1733	CRITICAL	NAND_256G

PART NUMBER	ALTERNATE FOR PART NUMBER	BOM OPTION	REF DES	COMMENTS:
335S00201	335S00169	ALTERNATE	U1701	T,15nm,MLC,32GB
335S00209	335S00169	ALTERNATE	U1701	S,16nm,MLC,32GB
335S00195	335S00182	ALTERNATE	U1701	SS,1Ynm,TLC,128GB
335S00180	335S00182	ALTERNATE	U1701	T,15nm,TLC,128GB
335S00179	335S00182	ALTERNATE	U1701	SD,15nm,TLC,128GB
335S00148	335S00183	ALTERNATE	U1701	SD,3Dv2,TLC,256GB
335S00190	335S00183	ALTERNATE	U1701	SS,3Dv3,TLC,256GB

#22686038:See Radar

CAYMAN DDR Alternates

PART NUMBER	ALTERNATE FOR PART NUMBER	BOM OPTION	REF DES	COMMENTS:
339S00254	339S00253	ALTERNATE	ALL	DDR-H, 2G, B1
339S00255	339S00253	ALTERNATE	ALL	DDR-S, 2G, B1
339S00257	339S00253	ALTERNATE	ALL	DDR-H, 3G, B1
339S00258	339S00253	ALTERNATE	ALL	DDR-S, 3G, B1
339S00256	339S00253	ALTERNATE	ALL	DDR-M, 3G, B1

Magnesium Alternates

PART NUMBER	ALTERNATE FOR PART NUMBER	BOM OPTION	REF DES	COMMENTS:
338S00173	338S00203	ALTERNATE	U2402	Larger Wafer (-29 flow) Magnesium

Carbon Alternates

PART NUMBER	ALTERNATE FOR PART NUMBER	BOM OPTION	REF DES	COMMENTS:
338S00087	338S00226	ALTERNATE	U2401,U2404	Updated version of Carbon

Phosphorous Alternates

PART NUMBER	ALTERNATE FOR PART NUMBER	BOM OPTION	REF DES	COMMENTS:
338S00230	338S00188	ALTERNATE	U2403	ST version of Phosphorous

UT LDO Alternates

PART NUMBER	ALTERNATE FOR PART NUMBER	BOM OPTION	REF DES	COMMENTS:
353S00889	353S00015	ALTERNATE	U2501	ST, L30 REG, 2.925V, CSP 0.65x0.65

Mamba LDO Alternates

PART NUMBER	ALTERNATE FOR PART NUMBER	BOM OPTION	REF DES	COMMENTS:
353S00932	353S00576	ALTERNATE	U3801	ST, L30 REG, 2.75V

EEPROM Alternate

PART NUMBER	ALTERNATE FOR PART NUMBER	BOM OPTION	REF DES	COMMENTS:
335S00234	335S00233	ALTERNATE	U1101	IC,EEPROM,16K33,1.8V,I2C,WLCSP4,ONSEMI

Active Diode Alternate

PART NUMBER	ALTERNATE FOR PART NUMBER	BOM OPTION	REF DES	COMMENTS:
376S00106	376S00047	ALTERNATE	Q2101	DIODES INC. ACT DIODE

DDR PLL Alternate

PART NUMBER	ALTERNATE FOR PART NUMBER	BOM OPTION	REF DES	COMMENTS:
155S00095	155S00068	ALTERNATE	FL1501	FERR BD,1000OHM,25%,100MA,2OHM,0100S

Power Inductor Alternates

PART NUMBER	ALTERNATE FOR PART NUMBER	BOM OPTION	REF DES	COMMENTS:	
152S00118	152S00075	ALTERNATE	ALL	IND,PWR,SHLD,1.2 UH,3.0A,0.080 OHM,2016	
152S00077	152S00397	ALTERNATE	ALL	IND,PWR,SHLD,1.0 UH,2.25A,0.150 OHM,2016	updated 11/12
152S00121	152S00081	ALTERNATE	ALL	IND,PWR,SHLD,0.47 UH,3.8A,0.048 OHM,2012	
152S00123	152S1936	ALTERNATE	ALL	IND,PWR,SHLD,15 UH,0.72A,0.900 OHM,3225	
152S00402	152S00366	ALTERNATE	ALL	IND,MULT,SUM,1.2A,0.320 OHM,0603	updated 11/12
152S00297	152S1843	ALTERNATE	ALL	CYNTEC 2012 SUM	reverted 11/13
152S00365	152S00297	ALTERNATE	ALL	CYNTEC 2012 SUM	
152S00398	152S00204	ALTERNATE	ALL	IND,PWR,0.22UH,20%,6.7A,22MOHM,2012	For Chestnut inductor; so it doesn't interfere with PMU inducotr Buck 7 alts
152S00120	152S00077	ALTERNATE	ALL	For Chestnut inductor only	Except BUCK5 LX (BUCK5 LX is Taiyo only)
152S00117	152S00074	ALTERNATE	L900,L903,L904,L906,L907	IND,PWR,SHLD,1.0 UH,3.0A,0.060 OHM,2016	

Global R/C Alternates

PART NUMBER	ALTERNATE FOR PART NUMBER	BOM OPTION	REF DES	COMMENTS:	
118S0764	118S0717	ALTERNATE	ALL	RES, 3.92K, 0.1%, 0201	
138S0702	138S0657	ALTERNATE	ALL	CAP, X5R, 4.3UF, 4V, 0610	
138S00006	138S0835	ALTERNATE	ALL	CAP, 3-TERM, 4.3UF, 4V, 0402	
138S00005	138S00003	ALTERNATE	ALL	CAP,X5R,15UF,6.3V,0.65MM,0402,TAIYO	
138S00048	138S00003	ALTERNATE	ALL	CAP,X5R,15UF,6.3V,0.65MM,0402,KYOCERA	
138S0648	138S0652	ALTERNATE	ALL	CAP,X5R,4.7UF,6.3V,0.65MM,0402,TAIYO	
132S0400	132S0436	ALTERNATE	ALL	CAP,X5R,0.22UF,6.3V,01005,TDK	
138S00024	138S0986	ALTERNATE	ALL	CAP,CER,3-TERM,7.5UF,20%,4V,0402,TAIYO/TDK	
138S0706	138S0739	ALTERNATE	ALL	CAP,CER,1UF,20%,10V,X5R,0201,MURATA	
138S0945	138S0739	ALTERNATE	ALL	CAP,CER,1UF,20%,10V,X5R,0201,KYOCERA	
132S0436	132S0400	ALTERNATE	ALL	CAP,CER,X5R,0.22UF,20%,6.3V,20%	
138S00117	138S00071	ALTERNATE	ALL	CAP,X5R,4UF,0201,6.3V,20%, KYOCERA	New in Carrier, per #25737217

Global Ferrite Alternates

PART NUMBER	ALTERNATE FOR PART NUMBER	BOM OPTION	REF DES	COMMENTS:
155S00067	155S0581	ALTERNATE	ALL	FERR, 240OHM, 0.380HM DCR, 0201
155S0581	155S00067	ALTERNATE	ALL	FERR, 240OHM, 0.380HM DCR, 0201
155S00012	155S00168	ALTERNATE	ALL	FLTR, 65 OHMS, 0605
155S00194	155S0610	ALTERNATE	ALL	FERR BD, 150OHM, TDK
155S0885	155S0610	ALTERNATE	ALL	FERR BD, 150OHM, TY
152S00489	152S00456	ALTERNATE	ALL	FERR BD, 0.47UH, TY

Global Varistor Alternates

PART NUMBER	ALTERNATE FOR PART NUMBER	BOM OPTION	REF DES	COMMENTS:
377S0168	377S0140	ALTERNATE	ALL	VARISTOR, 6.8V, 100PF, 01005

ACC BUCK Alternates

PART NUMBER	ALTERNATE FOR PART NUMBER	BOM OPTION	REF DES	COMMENTS:
371S00087	371S00064	ALTERNATE	D2700	DIODE,SHOTTKY,30V,200MA,0201
152S00558	152S00557	ALTERNATE	L2700	IND,MLD,0.47UH,2.5A,80MOhm,1608

PAGE_MASTER.pict

PAGE TITLE

SYSTEM:BOM TABLES

Apple Inc.

DRAWING NUMBER 051-00542

SIZE D

REVISION 5.0.0

BRANCH

PAGE 2 OF 53

SHEET 2 OF 81

NOTICE OF PROPRIETARY PROPERTY:

THE INFORMATION CONTAINED HEREIN IS THE PROPRIETARY PROPERTY OF APPLE INC.
THE POSESSOR AGREES TO THE FOLLOWING:
I TO MAINTAIN THIS DOCUMENT IN CONFIDENCE
II NOT TO REPRODUCE OR COPY IT
III NOT TO REVEAL OR PUBLISH IT IN WHOLE OR PART
IV ALL RIGHTS RESERVED

D111 EEEE CALLOUTS

PART#	QTY	DESCRIPTION	REFERENCE DESIGNATOR(S)	CRITICAL	BOM OPTION
825-6838	1	EEEE CODE FOR 639-01824	EEEE_GY4R	CRITICAL	EEEE_D111_BEST
825-6838	1	EEEE CODE FOR 639-01825	EEEE_GY4T	CRITICAL	EEEE_D111_SUPREME
825-6838	1	EEEE CODE FOR 639-01826	EEEE_GY4V	CRITICAL	EEEE_D111_EXTREME

PART NUMBER	ALTERNATE FOR PART NUMBER	BOM OPTION	REF DES	COMMENTS:
138S00049	138S00032	ALTERNATE	ALL	CAP,CER,X5R,2.2UF,20%6.3V,20%, KYOCERA
138S0831	138S00032	ALTERNATE	ALL	CAP,CER,X5R,2.2UF,20%,6.3V,20%,MURATA

SYNC_DATE=02/24/2016

PAGE TITLE

SYSTEM:EEEE CALLOUTS

Apple Inc.

DRAWING NUMBER 051-00542

SIZE D

REVISION 5.0.0

BRANCH

PAGE 3 OF 53

SHEET 3 OF 81

NOTICE OF PROPRIETARY PROPERTY:

THE INFORMATION CONTAINED HEREIN IS THE PROPRIETARY PROPERTY OF APPLE INC.
THE POSESSOR AGREES TO THE FOLLOWING:
I TO MAINTAIN THIS DOCUMENT IN CONFIDENCE
II NOT TO REPRODUCE OR COPY IT
III NOT TO REVEAL OR PUBLISH IT IN WHOLE OR PART
IV ALL RIGHTS RESERVED

Current as of D11 MCO 056-01585 rev. 63

0 0 Contained in radio_mlb pages

BS0415 2.70R1.80-NSP — UP_RFFE

BS0401 2.70R1.80-NSP — CHASSIS_GND_BS401

BS0402 STDOFF-2.90D0.888H-SM — CHASSIS_GND_BS402

BS0403 STDOFF-2.90D0.81H-SM — CHASSIS_GND_BS403

PTH per Rev63 for 1.8mm Drill

0 — NEO Stiffener — NORTH SCREW EXPOSED

#25046211

C0413 220PF 5% 10V C0G-CERM 01005
C0414 56PF 5% 25V NP0-C0G-CERM 01005
C0415 18PF 2% 16V CERM 01005
C0416 4PF +/-0.1PF 16V NP0-C0G 01005

CHASSIS_GND_BS401: C0401 220PF 5% 10V C0G-CERM 01005; C0402 220PF 5% 10V C0G-CERM 01005; C0403 100PF 5% 16V NP0-C0G 01005; C0404 56PF 5% 25V NP0-C0G-CERM 01005; C0405 18PF 2% 16V CERM 01005; C0406 4PF +/-0.1PF 16V NP0-C0G 01005

CHASSIS_GND_BS402: C0407 220PF 5% 10V C0G-CERM 01005; C0408 220PF 5% 10V C0G-CERM 01005; C0409 100PF 5% 16V NP0-C0G 01005; C0410 56PF 5% 25V NP0-C0G-CERM 01005; C0411 18PF 2% 16V CERM 01005; C0412 4PF +/-0.1PF 16V NP0-C0G 01005

CHASSIS_GND_BS403: C0417 220PF 5% 10V C0G-CERM 01005; C0418 220PF 5% 10V C0G-CERM 01005; C0419 100PF 5% 16V NP0-C0G 01005; C0420 56PF 5% 25V NP0-C0G-CERM 01005; C0421 18PF 2% 16V CERM 01005; C0422 4PF +/-0.1PF 16V NP0-C0G 01005

Front Shields

SH0401 SM — SHLD-UP-FRT-D11

SH0403 SM — SHLD-LOWER-FRT-D11

BS0404 2.70R1.80-NSP

Back Shields

SH0400 SM — SHLD-SOFT-UP-BK-D11

SH0402 SM — SHLD-SOFT-LOWER-BK-D11

BS0405 STDOFF-2.90D0.888H-SM

BS0406 STDOFF-2.90D1.9ID-0.85H-SM

CLIP-COAX-RETENTION-D11 — CL0401 SM

TESTPOINTS

POWER

TP0420 — POWER GROUND

PP5V0_USB — TP0421 — VBUS

PP_BATT_VCC — TP0415, TP0422 — VBATT

PP_VDD_MAIN — TP0408 — VDD_MAIN

FD0408 FID 0P5SM1P0SQ-NSP — Note: Fiducial used as test point

LCM

PP_LCM_BL_CAT1_CONN — TP0409 — LCM BACKLIGHT SINK1

PP_LCM_BL_CAT2_CONN — TP0410 — LCM BACKLIGHT SINK2

PP_LCM_BL_ANODE_CONN — TP0411 — LCM BACKLIGHT SOURCE

PP_LCM_BL34_CAT1_CONN — TP0417 — LCM BACKLIGHT SINK3

PP_LCM_BL34_CAT2_CONN — TP0419 — LCM BACKLIGHT SINK4

PP_LCM_BL34_ANODE_CONN — TP0418 — LCM BACKLIGHT SOURCE (3/4)

DFU

PMU_TO_AP_FORCE_DFU — TP0414 — FORCE DFU

E75

90_TRISTAR_DP1_CONN_P — TP0402

90_TRISTAR_DP1_CONN_N — TP0403

90_TRISTAR_DP2_CONN_P — TP0404

90_TRISTAR_DP2_CONN_N — TP0405

PP_TRISTAR_ACC1 — TP0406

PP_TRISTAR_ACC2 — TP0407

ACCESSORY ID AND POWER

TP0416 — TP IS TO HELP WITH USB SI IN THE FACTORY FIXTURE.

TRISTAR_CON_DETECT_L — TP0412 — FOR DIAGS

AMUX

PMU_AMUX_AY — TP0413 — ANALOG MUX A OUTPUT

#25244799 100k to 200k — R0413 200K 1% 1/32W MF 01005

PMU_AMUX_BY — TP0423 — ANALOG MUX B OUTPUT

Note: Fiducial used as test point

MOJAVE

MESA_TO_BOOST_EN — TP0400

PP16V0_MESA — TP0401

FIDUCIALS

FD0410, FD0409, FD0405, FD0406, FD0404, FD0403, FD0402, FD0401, FD0400 — FID 0P5SQ-SMP3SQ-NSP

FD0407 FID 0P5SM1P0SQ-NSP

FD0411 FID 0P5SQ-SMP3SQ-NSP

TOP SIDE

PAGE TITLE: SYSTEM:MECHANICAL COMPONENTS

Apple Inc.

DRAWING NUMBER: 051-00542 — SIZE: D

REVISION: 5.0.0

BRANCH

PAGE: 4 OF 53

SHEET: 4 OF 81

NOTICE OF PROPRIETARY PROPERTY:
THE INFORMATION CONTAINED HEREIN IS THE PROPRIETARY PROPERTY OF APPLE INC.
THE POSESSOR AGREES TO THE FOLLOWING:
I TO MAINTAIN THIS DOCUMENT IN CONFIDENCE
II NOT TO REPRODUCE OR COPY IT
III NOT TO REVEAL OR PUBLISH IT IN WHOLE OR PART
IV ALL RIGHTS RESERVED

BOOTSTRAPPING:BOARD REV
BOARD ID
BOOT CONFIG

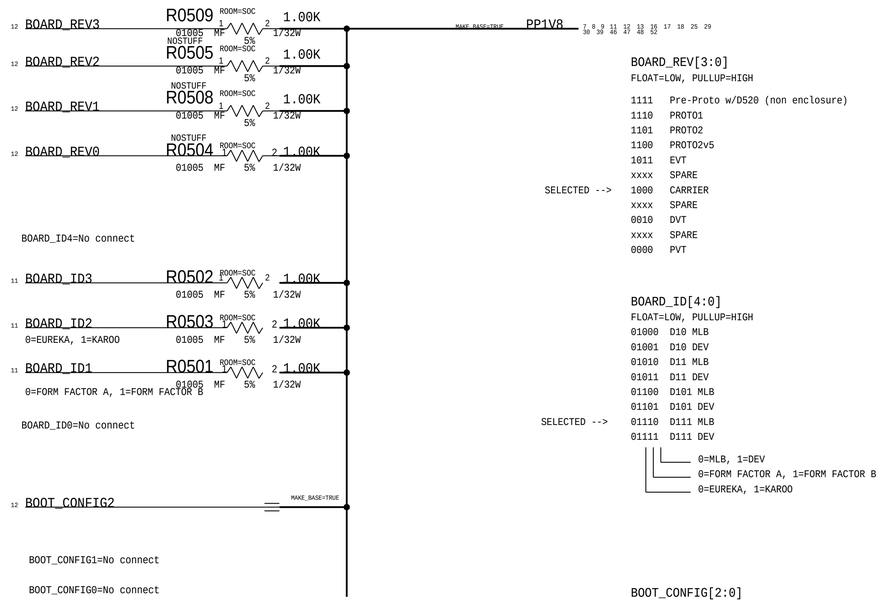

BOARD_REV[3:0]
FLOAT=LOW, PULLUP=HIGH

	1111	Pre-Proto w/D520 (non enclosure)
	1110	PROTO1
	1101	PROTO2
	1100	PROTO2v5
	1011	EVT
	xxxx	SPARE
SELECTED -->	1000	CARRIER
	xxxx	SPARE
	0010	DVT
	xxxx	SPARE
	0000	PVT

BOARD_ID[4:0]
FLOAT=LOW, PULLUP=HIGH

	01000	D10 MLB
	01001	D10 DEV
	01010	D11 MLB
	01011	D11 DEV
	01100	D101 MLB
	01101	D101 DEV
SELECTED -->	01110	D111 MLB
	01111	D111 DEV

0=MLB, 1=DEV
0=FORM FACTOR A, 1=FORM FACTOR B
0=EUREKA, 1=KAROO

BOOT_CONFIG[2:0]
FLOAT=LOW, PULLUP=HIGH

	000	SPI0
	001	SPI0 TEST MODE
	010	NVME0_X2
	011	NVME0 X2 TEST
SELECTED -->	100	NVME0 X1
	101	NVME0 X1 TEST
	110	SLOW SPI0 TEST
	111	FAST SPI0 TEST

SYNC_MASTER=ffspecific SYNC_DATE=09/03/2015

PAGE TITLE
SYSTEM:TESTPOINTS, BOARDID

Apple Inc.

DRAWING NUMBER 051-00542 SIZE D
REVISION 5.0.0
BRANCH
PAGE 5 OF 53
SHEET 5 OF 81

NOTICE OF PROPRIETARY PROPERTY:
THE INFORMATION CONTAINED HEREIN IS THE PROPRIETARY PROPERTY OF APPLE INC.
THE POSESSOR AGREES TO THE FOLLOWING:
I TO MAINTAIN THIS DOCUMENT IN CONFIDENCE
II NOT TO REPRODUCE OR COPY IT
III NOT TO REVEAL OR PUBLISH IT IN WHOLE OR PART
IV ALL RIGHTS RESERVED

PAGE TITLE

spare

Apple Inc.

DRAWING NUMBER	051-00542
SIZE	D
REVISION	5.0.0
BRANCH	
PAGE	6 OF 53
SHEET	6 OF 81

NOTICE OF PROPRIETARY PROPERTY:

THE INFORMATION CONTAINED HEREIN IS THE PROPRIETARY PROPERTY OF APPLE INC.
THE POSESSOR AGREES TO THE FOLLOWING:

I TO MAINTAIN THIS DOCUMENT IN CONFIDENCE

II NOT TO REPRODUCE OR COPY IT

III NOT TO REVEAL OR PUBLISH IT IN WHOLE OR PART

IV ALL RIGHTS RESERVED

SOC - USB, JTAG, XTAL

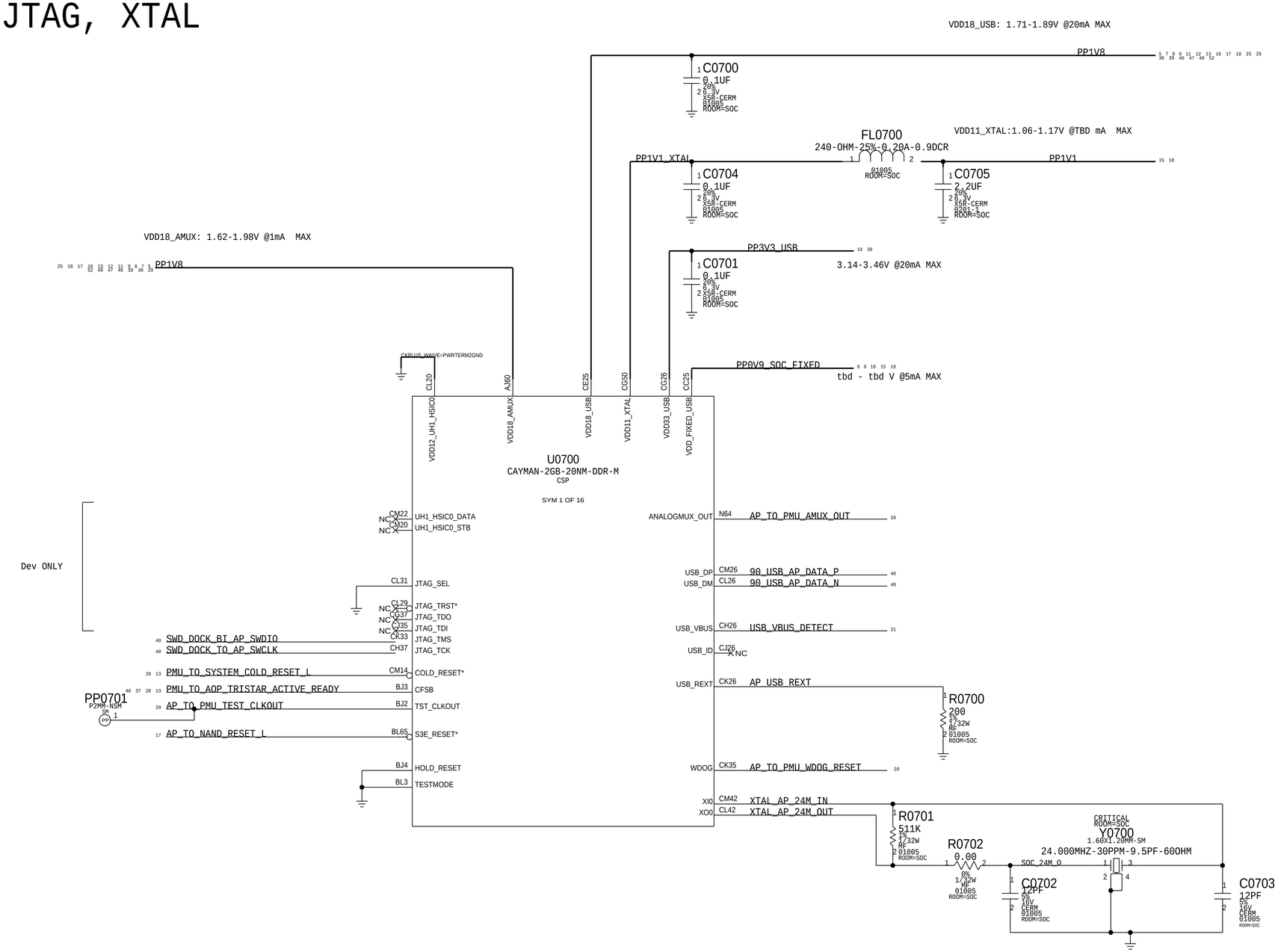

PAGE TITLE	SOC:JTAG,USB,XTAL
Apple Inc.	DRAWING NUMBER 051-00542 SIZE D
	REVISION 5.0.0
NOTICE OF PROPRIETARY PROPERTY: THE INFORMATION CONTAINED HEREIN IS THE PROPRIETARY PROPERTY OF APPLE INC. THE POSESSOR AGREES TO THE FOLLOWING: I TO MAINTAIN THIS DOCUMENT IN CONFIDENCE II NOT TO REPRODUCE OR COPY IT III NOT TO REVEAL OR PUBLISH IT IN WHOLE OR PART IV ALL RIGHTS RESERVED	BRANCH
	PAGE 7 OF 53
	SHEET 7 OF 81

SOC - PCIE INTERFACES

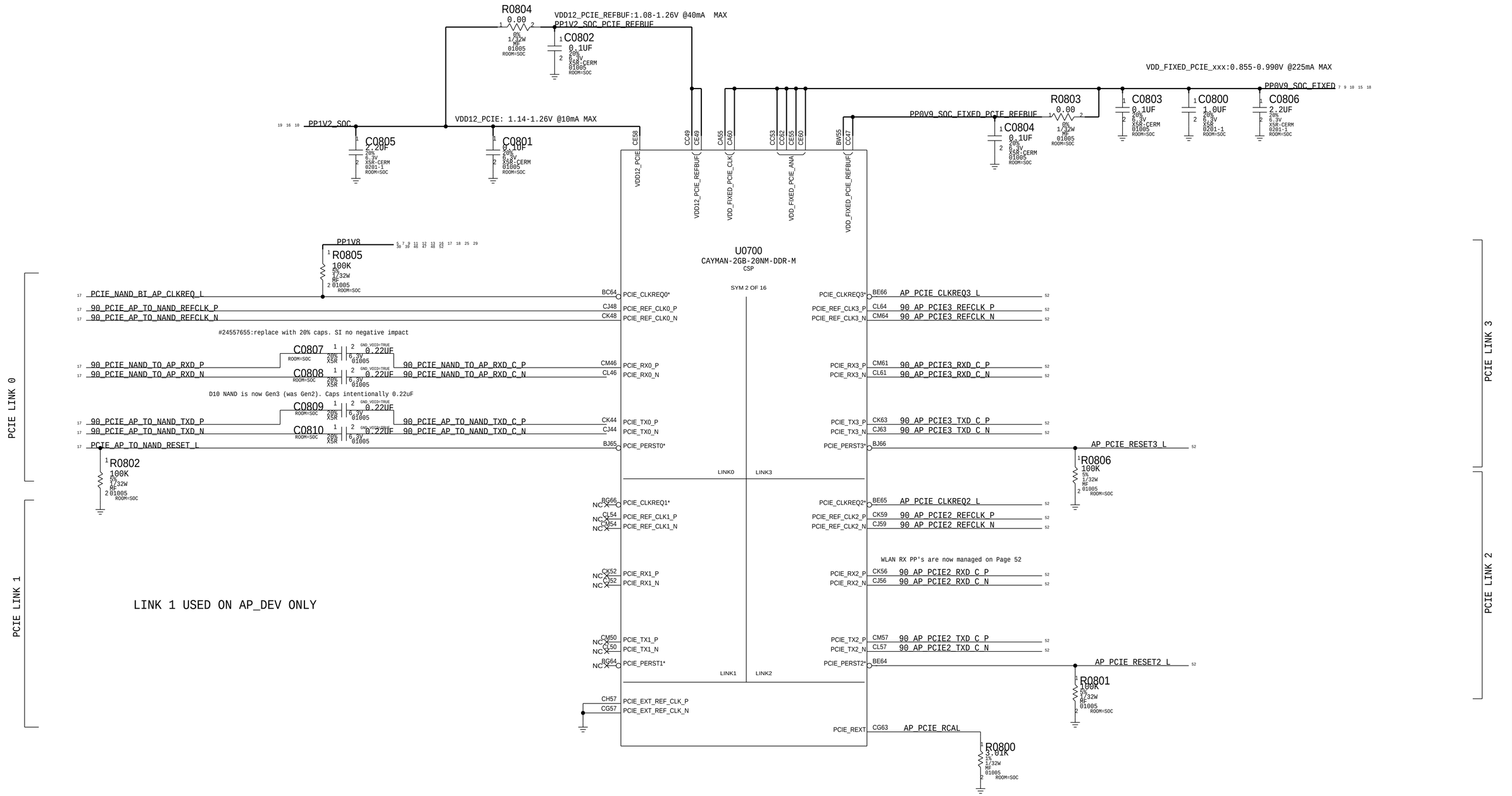

PAGE TITLE	SOC:PCIE
Apple Inc.	DRAWING NUMBER 051-00542 SIZE D
	REVISION 5.0.0
	BRANCH
	PAGE 8 OF 53
	SHEET 8 OF 81

NOTICE OF PROPRIETARY PROPERTY:
THE INFORMATION CONTAINED HEREIN IS THE PROPRIETARY PROPERTY OF APPLE INC.
THE POSESSOR AGREES TO THE FOLLOWING:
I TO MAINTAIN THIS DOCUMENT IN CONFIDENCE
II NOT TO REPRODUCE OR COPY IT
III NOT TO REVEAL OR PUBLISH IT IN WHOLE OR PART
IV ALL RIGHTS RESERVED

SOC - MIPI & ISP INTERFACES

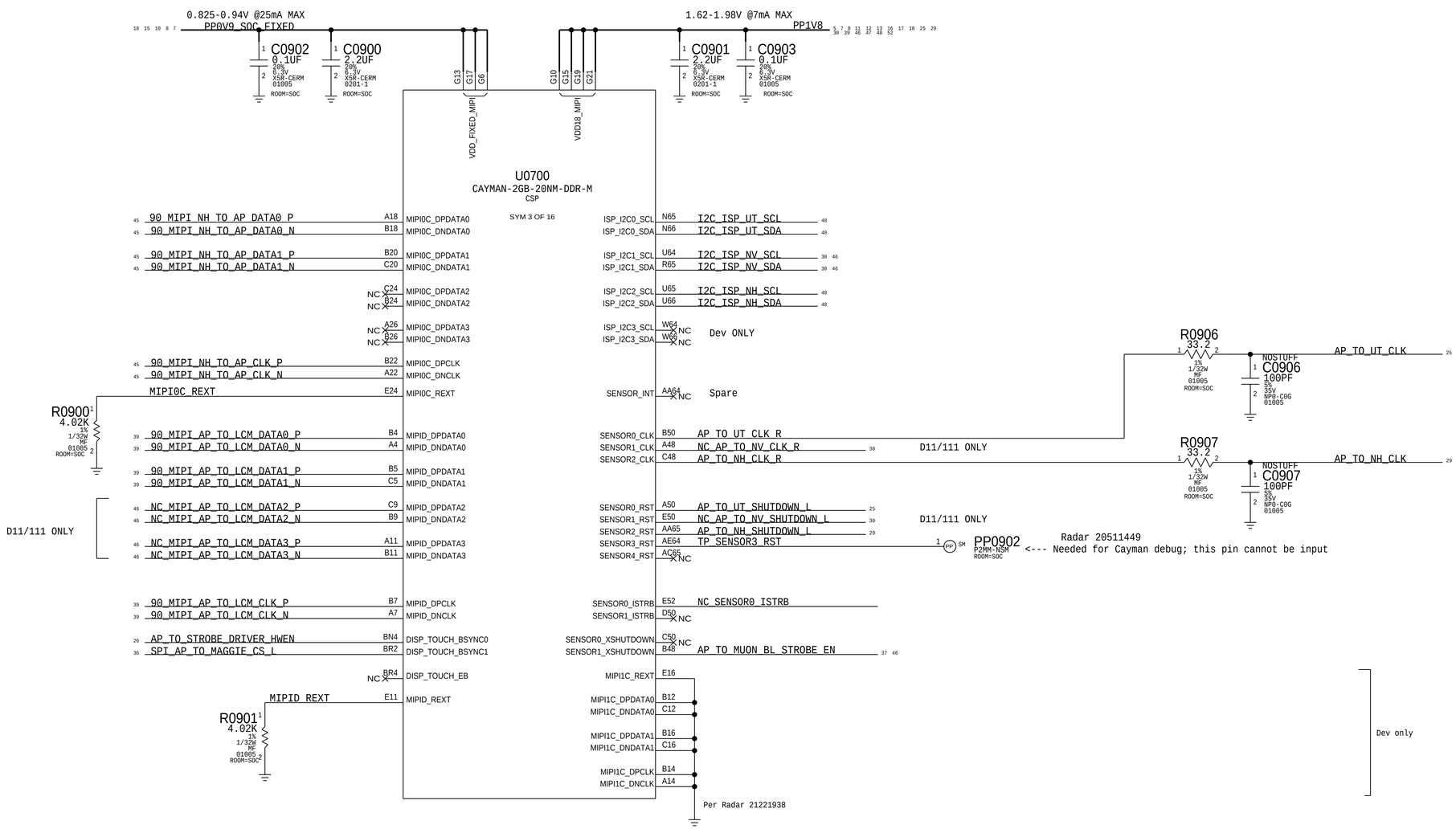

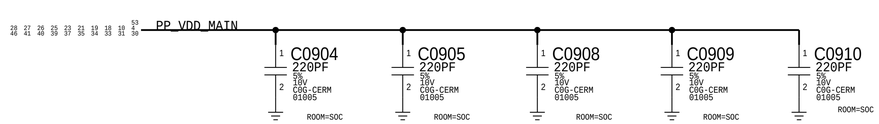

PAGE TITLE

SOC:MIPI AND ISP

Apple Inc.

DRAWING NUMBER 051-00542 SIZE D

REVISION 5.0.0

BRANCH

PAGE 9 OF 53

SHEET 9 OF 81

NOTICE OF PROPRIETARY PROPERTY:
THE INFORMATION CONTAINED HEREIN IS THE PROPRIETARY PROPERTY OF APPLE INC.
THE POSESSOR AGREES TO THE FOLLOWING:
I TO MAINTAIN THIS DOCUMENT IN CONFIDENCE
II NOT TO REPRODUCE OR COPY IT
III NOT TO REVEAL OR PUBLISH IT IN WHOLE OR PART
IV ALL RIGHTS RESERVED

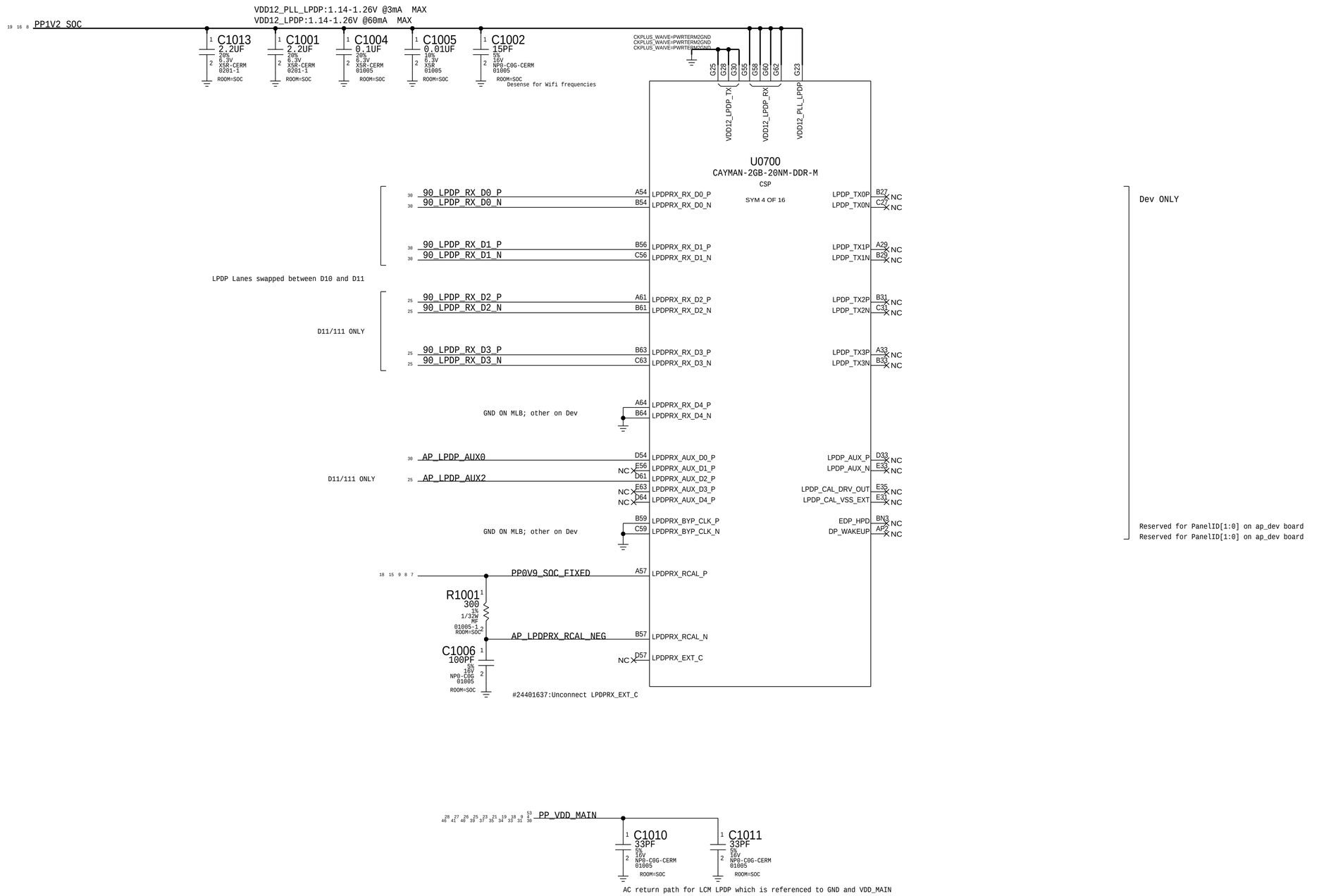

PAGE TITLE

SOC:LPDP

Apple Inc.

DRAWING NUMBER 051-00542 SIZE D

REVISION 5.0.0

BRANCH

PAGE 10 OF 53

SHEET 10 OF 81

NOTICE OF PROPRIETARY PROPERTY:

THE INFORMATION CONTAINED HEREIN IS THE PROPRIETARY PROPERTY OF APPLE INC.
THE POSESSOR AGREES TO THE FOLLOWING:
I TO MAINTAIN THIS DOCUMENT IN CONFIDENCE
II NOT TO REPRODUCE OR COPY IT
III NOT TO REVEAL OR PUBLISH IT IN WHOLE OR PART
IV ALL RIGHTS RESERVED

SOC - SERIAL INTERFACES

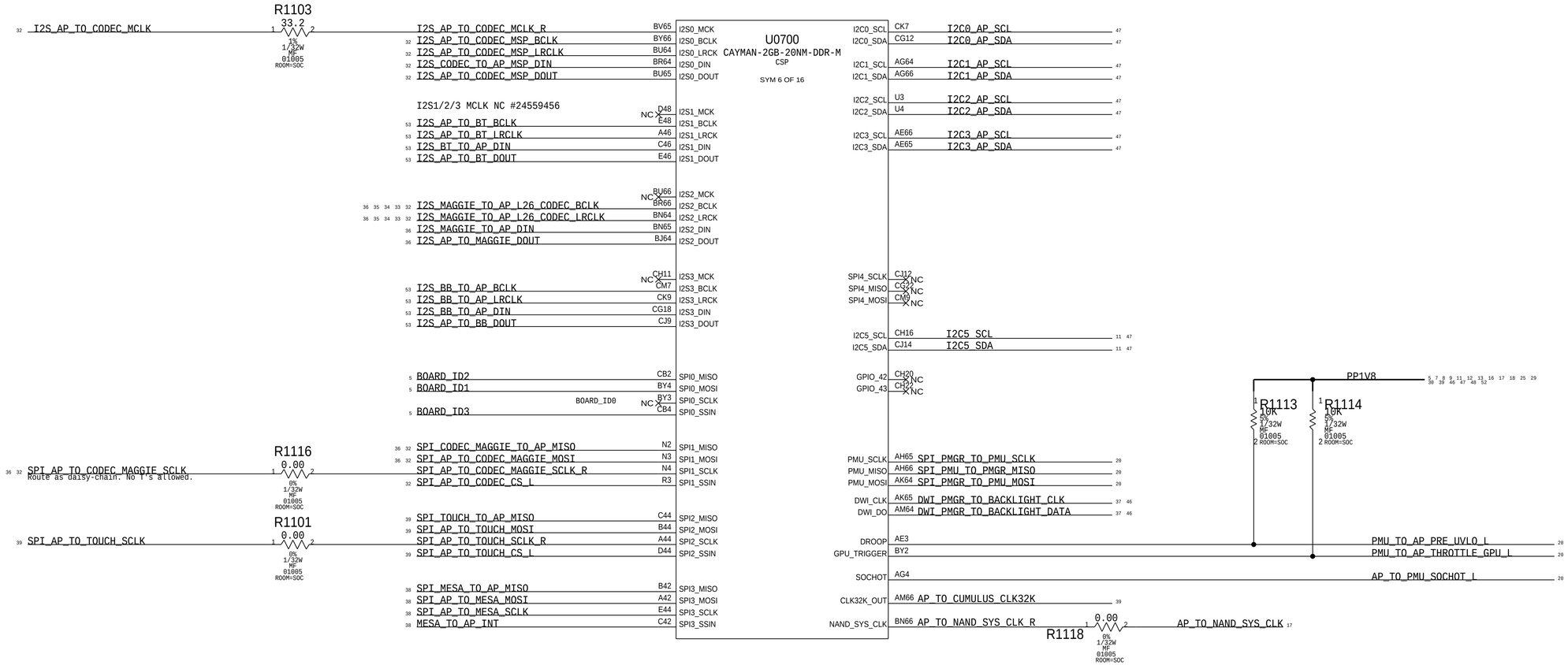

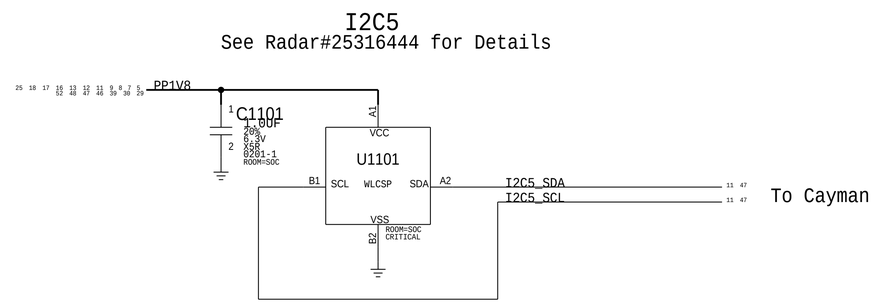

PAGE TITLE
SOC:SERIAL

Apple Inc.

DRAWING NUMBER 051-00542 SIZE D

REVISION 5.0.0

BRANCH

PAGE 11 OF 53

SHEET 11 OF 81

NOTICE OF PROPRIETARY PROPERTY:
THE INFORMATION CONTAINED HEREIN IS THE PROPRIETARY PROPERTY OF APPLE INC.
THE POSESSOR AGREES TO THE FOLLOWING:
I TO MAINTAIN THIS DOCUMENT IN CONFIDENCE
II NOT TO REPRODUCE OR COPY IT
III NOT TO REVEAL OR PUBLISH IT IN WHOLE OR PART
IV ALL RIGHTS RESERVED

SOC - GPIO INTERFACES

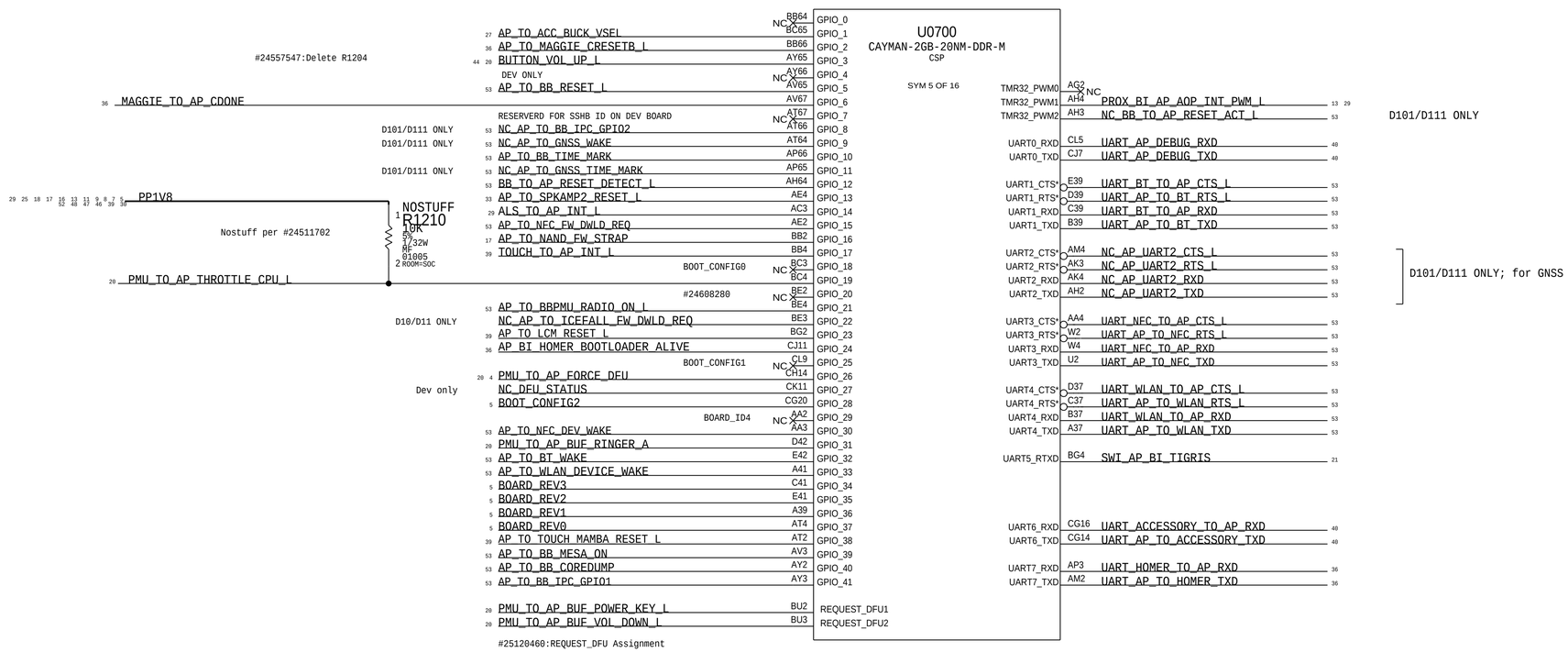

PAGE TITLE

SOC:GPIO & UART

Apple Inc.

DRAWING NUMBER 051-00542 SIZE D

REVISION 5.0.0

BRANCH

PAGE 12 OF 53

SHEET 12 OF 81

NOTICE OF PROPRIETARY PROPERTY:
THE INFORMATION CONTAINED HEREIN IS THE PROPRIETARY PROPERTY OF APPLE INC.
THE POSESSOR AGREES TO THE FOLLOWING:
I TO MAINTAIN THIS DOCUMENT IN CONFIDENCE
II NOT TO REPRODUCE OR COPY IT
III NOT TO REVEAL OR PUBLISH IT IN WHOLE OR PART
IV ALL RIGHTS RESERVED

SOC - AOP

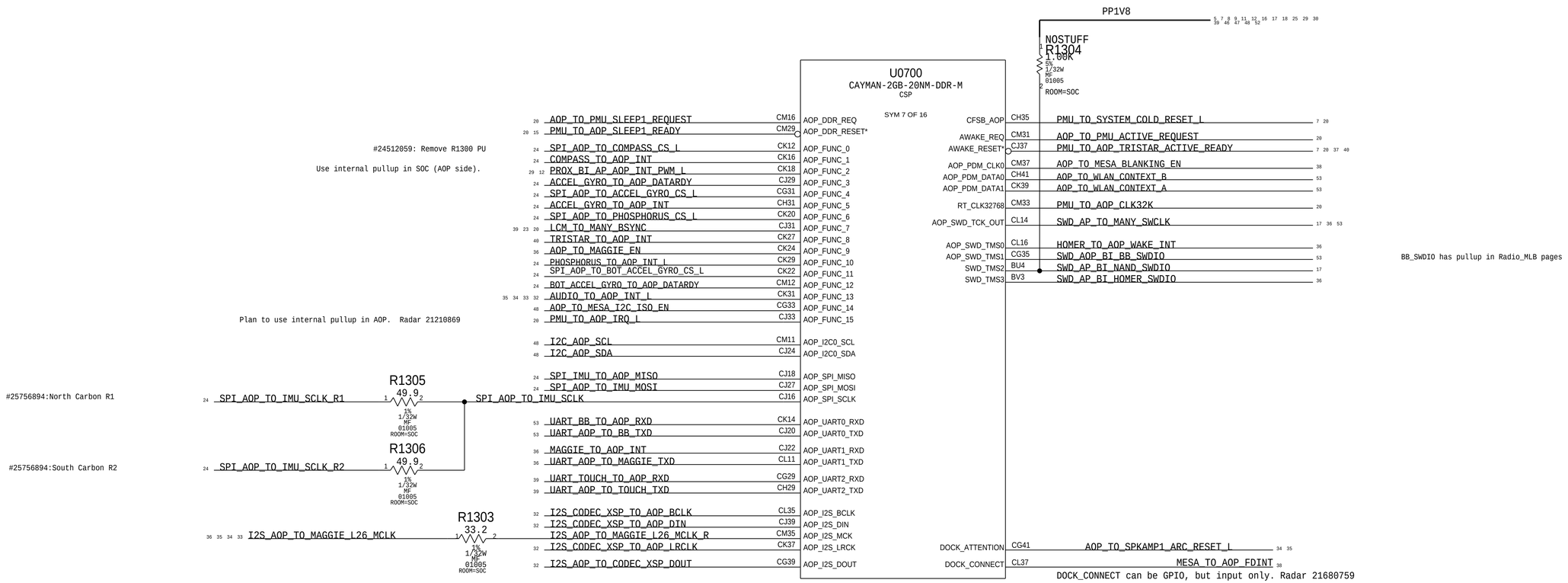

PAGE TITLE

SOC:AOP

Apple Inc.

DRAWING NUMBER 051-00542 SIZE D

REVISION 5.0.0

BRANCH

PAGE 13 OF 53

SHEET 13 OF 81

NOTICE OF PROPRIETARY PROPERTY:
THE INFORMATION CONTAINED HEREIN IS THE PROPRIETARY PROPERTY OF APPLE INC.
THE POSESSOR AGREES TO THE FOLLOWING:
I TO MAINTAIN THIS DOCUMENT IN CONFIDENCE
II NOT TO REPRODUCE OR COPY IT
III NOT TO REVEAL OR PUBLISH IT IN WHOLE OR PART
IV ALL RIGHTS RESERVED

SOC - CPU, GPU & SOC RAILS

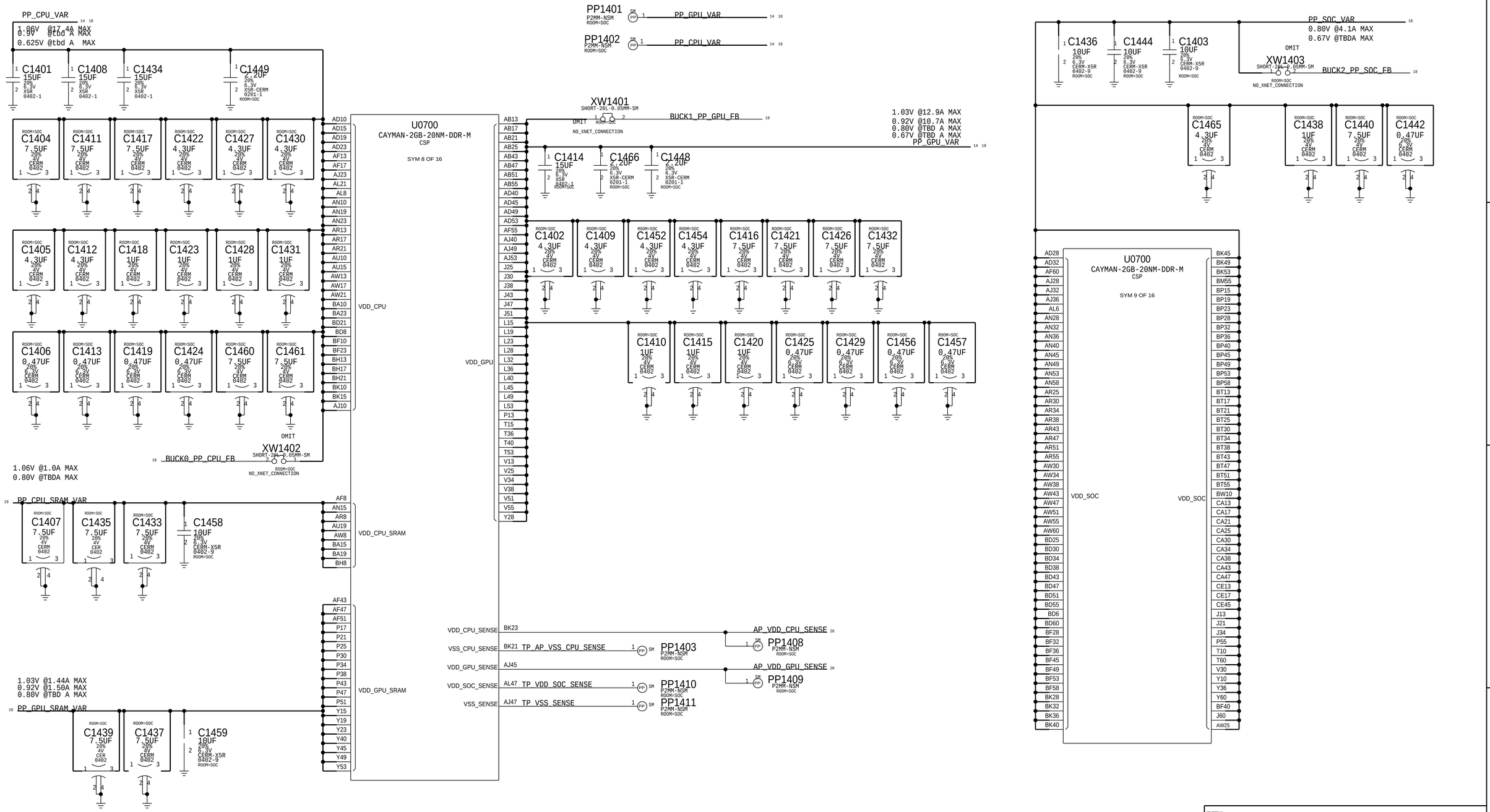

PAGE TITLE

SOC:POWER (1/3)

Apple Inc.

DRAWING NUMBER 051-00542 SIZE D

REVISION 5.0.0

BRANCH

PAGE 14 OF 53

SHEET 14 OF 81

NOTICE OF PROPRIETARY PROPERTY:

THE INFORMATION CONTAINED HEREIN IS THE PROPRIETARY PROPERTY OF APPLE INC.
THE POSESSOR AGREES TO THE FOLLOWING:
I TO MAINTAIN THIS DOCUMENT IN CONFIDENCE
II NOT TO REPRODUCE OR COPY IT
III NOT TO REVEAL OR PUBLISH IT IN WHOLE OR PART
IV ALL RIGHTS RESERVED

SOC - POWER SUPPLIES

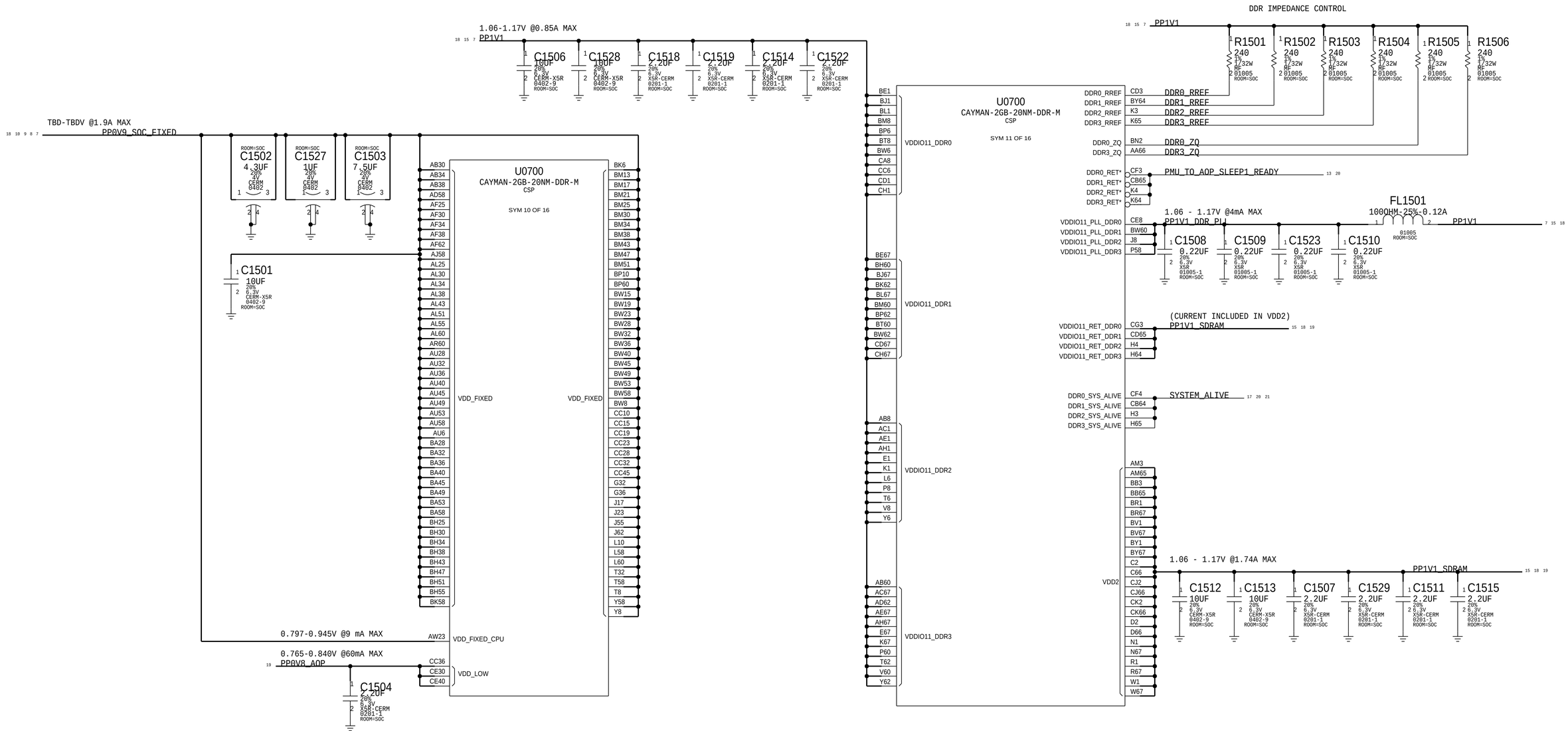

PAGE TITLE
SOC:POWER (2/3)

Apple Inc.

DRAWING NUMBER 051-00542 SIZE D
REVISION 5.0.0
BRANCH
PAGE 15 OF 53
SHEET 15 OF 81

NOTICE OF PROPRIETARY PROPERTY:
THE INFORMATION CONTAINED HEREIN IS THE PROPRIETARY PROPERTY OF APPLE INC.
THE POSESSOR AGREES TO THE FOLLOWING:
I TO MAINTAIN THIS DOCUMENT IN CONFIDENCE
II NOT TO REPRODUCE OR COPY IT
III NOT TO REVEAL OR PUBLISH IT IN WHOLE OR PART
IV ALL RIGHTS RESERVED

SOC - POWER SUPPLIES

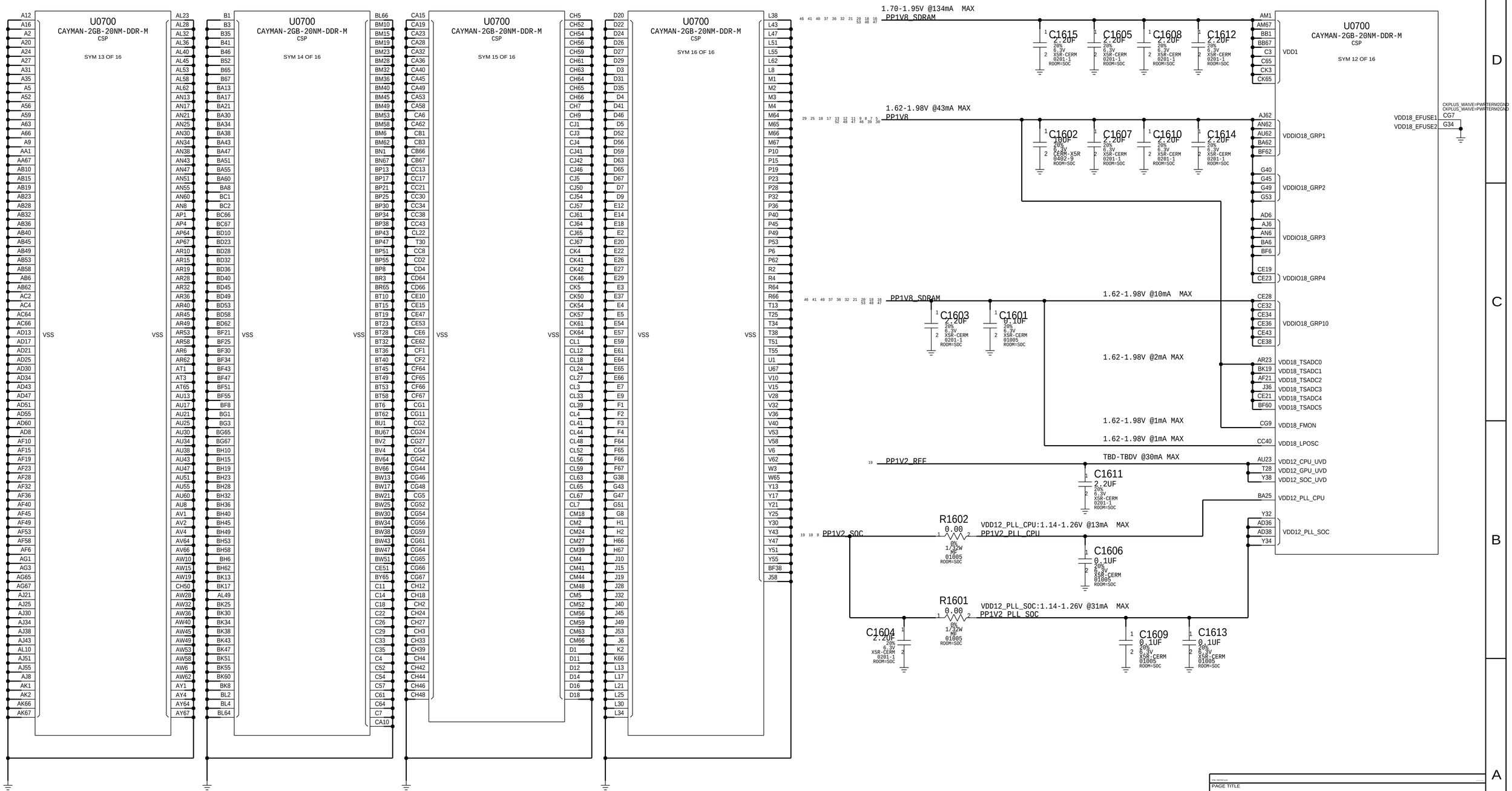

PAGE TITLE

SOC:POWER (3/3)

Apple Inc.

DRAWING NUMBER 051-00542 SIZE D

REVISION 5.0.0

BRANCH

PAGE 16 OF 53

SHEET 16 OF 81

NOTICE OF PROPRIETARY PROPERTY:

THE INFORMATION CONTAINED HEREIN IS THE PROPRIETARY PROPERTY OF APPLE INC.
THE POSESSOR AGREES TO THE FOLLOWING:
I TO MAINTAIN THIS DOCUMENT IN CONFIDENCE
II NOT TO REPRODUCE OR COPY IT
III NOT TO REVEAL OR PUBLISH IT IN WHOLE OR PART
IV ALL RIGHTS RESERVED

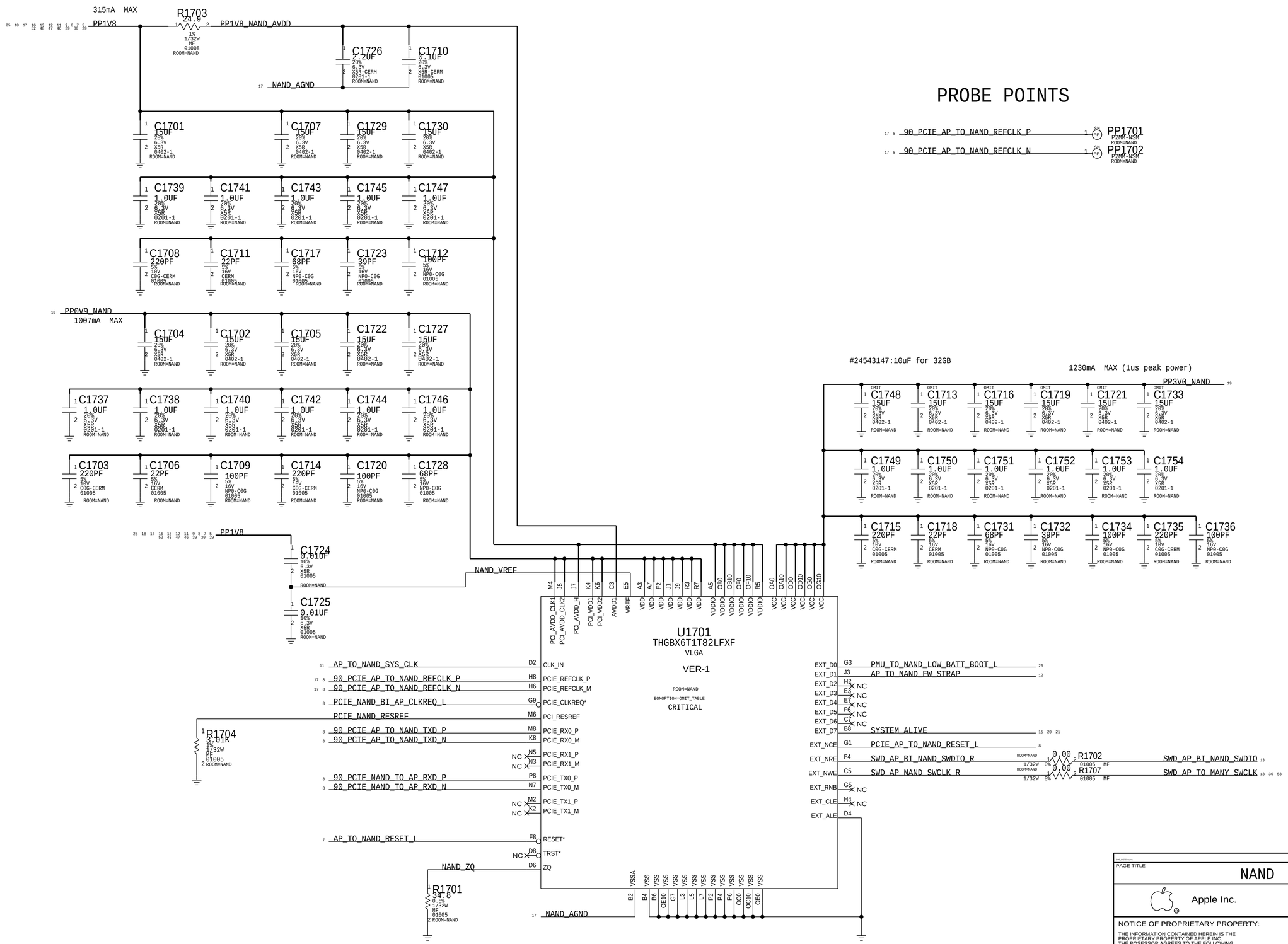

PAGE TITLE

NAND

Apple Inc.

DRAWING NUMBER	051-00542
SIZE	D
REVISION	5.0.0
BRANCH	
PAGE	17 OF 53
SHEET	17 OF 81

NOTICE OF PROPRIETARY PROPERTY:
THE INFORMATION CONTAINED HEREIN IS THE PROPRIETARY PROPERTY OF APPLE INC.
THE POSESSOR AGREES TO THE FOLLOWING:
I TO MAINTAIN THIS DOCUMENT IN CONFIDENCE
II NOT TO REPRODUCE OR COPY IT
III NOT TO REVEAL OR PUBLISH IT IN WHOLE OR PART
IV ALL RIGHTS RESERVED

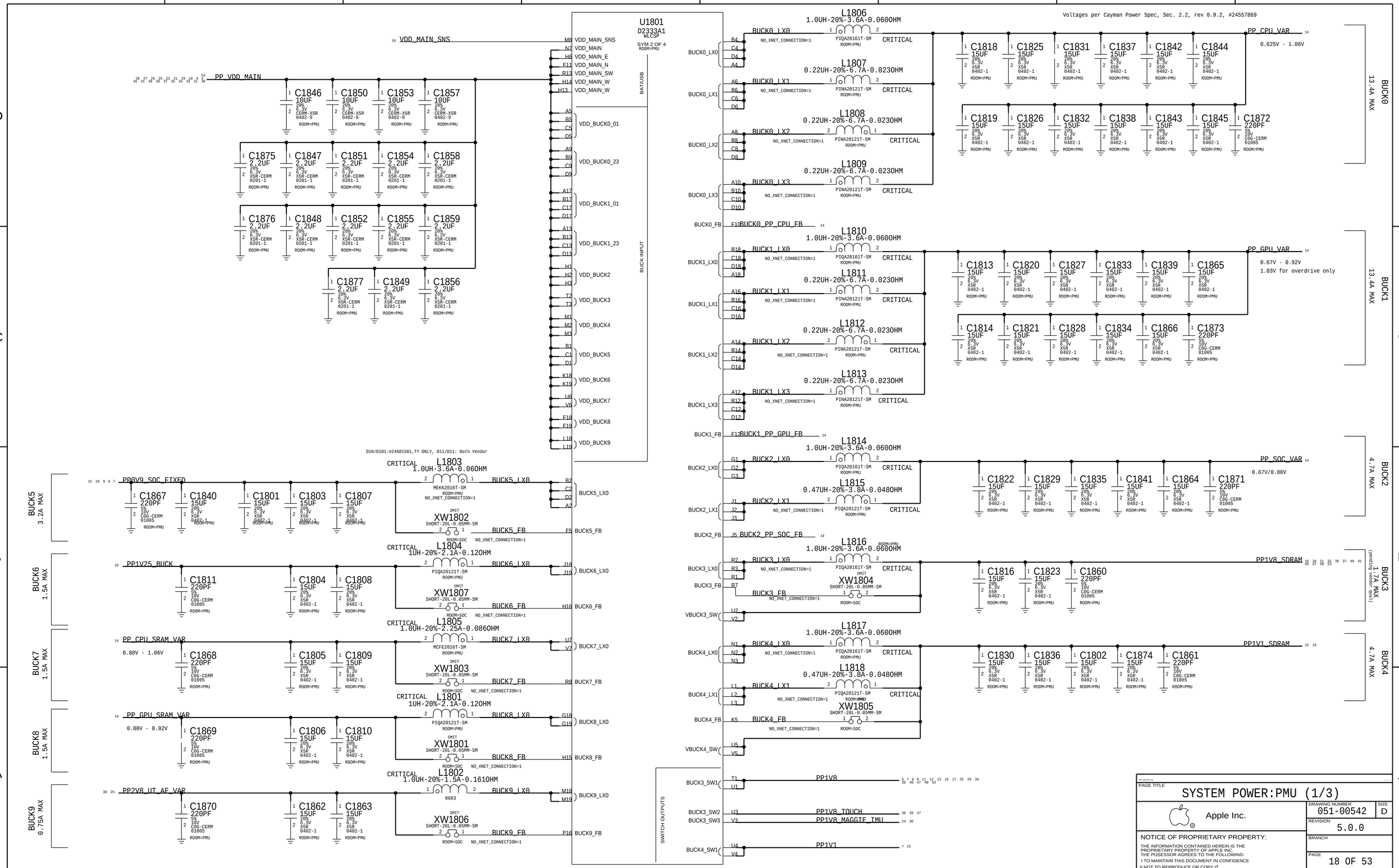
U1801
D2333A1
WLCSP
SYM 2 OF 4
ROOM=PMU
VDD_MAIN_SNS
VDD_MAIN
VDD_MAIN_E
VDD_MAIN_N
VDD_MAIN_SW
VDD_MAIN_W
VDD_MAIN_W
BAT/USB
VDD_BUCK0_01
VDD_BUCK0_23
VDD_BUCK1_01
VDD_BUCK1_23
VDD_BUCK2
VDD_BUCK3
VDD_BUCK4
VDD_BUCK5
VDD_BUCK6
VDD_BUCK7
VDD_BUCK8
VDD_BUCK9
BUCK INPUT
PP_VDD_MAIN
C1846 10UF 20% 6.3V CERM-X5R 0402-9 ROOM=PMU
C1850 10UF 20% 6.3V CERM-X5R 0402-9 ROOM=PMU
C1853 10UF 20% 6.3V CERM-X5R 0402-9 ROOM=PMU
C1857 10UF 20% 6.3V CERM-X5R 0402-9 ROOM=PMU
C1875 2.2UF 20% 6.3V X5R-CERM 0201-1 ROOM=PMU
C1847 2.2UF 20% 6.3V X5R-CERM 0201-1 ROOM=PMU
C1851 2.2UF 20% 6.3V X5R-CERM 0201-1 ROOM=PMU
C1854 2.2UF 20% 6.3V X5R-CERM 0201-1 ROOM=PMU
C1858 2.2UF 20% 6.3V X5R-CERM 0201-1 ROOM=PMU
C1876 2.2UF 20% 6.3V X5R-CERM 0201-1 ROOM=PMU
C1848 2.2UF 20% 6.3V X5R-CERM 0201-1 ROOM=PMU
C1852 2.2UF 20% 6.3V X5R-CERM 0201-1 ROOM=PMU
C1855 2.2UF 20% 6.3V X5R-CERM 0201-1 ROOM=PMU
C1859 2.2UF 20% 6.3V X5R-CERM 0201-1 ROOM=PMU
C1877 2.2UF 20% 6.3V X5R-CERM 0201-1 ROOM=PMU
C1849 2.2UF 20% 6.3V X5R-CERM 0201-1 ROOM=PMU
C1856 2.2UF 20% 6.3V X5R-CERM 0201-1 ROOM=PMU
Voltages per Cayman Power Spec, Sec. 2.2, rev 0.9.2, #24557869
BUCK0
13.4A MAX
L1806 1.0UH-20%-3.6A-0.060OHM PIQA20161T-SM ROOM=PMU
L1807 0.22UH-20%-6.7A-0.023OHM PINA20121T-SM ROOM=PMU
L1808 0.22UH-20%-6.7A-0.023OHM PINA20121T-SM ROOM=PMU
L1809 0.22UH-20%-6.7A-0.023OHM PINA20121T-SM ROOM=PMU
BUCK0_LX0
BUCK0_LX1
BUCK0_LX2
BUCK0_LX3
BUCK0_FB
BUCK0_PP_CPU_FB
NO_XNET_CONNECTION=1
CRITICAL
PP_CPU_VAR
0.625V - 1.06V
C1818 15UF 20% 6.3V X5R 0402-1 ROOM=PMU
C1825 15UF 20% 6.3V X5R 0402-1 ROOM=PMU
C1831 15UF 20% 6.3V X5R 0402-1 ROOM=PMU
C1837 15UF 20% 6.3V X5R 0402-1 ROOM=PMU
C1842 15UF 20% 6.3V X5R 0402-1 ROOM=PMU
C1844 15UF 20% 6.3V X5R 0402-1 ROOM=PMU
C1819 15UF 20% 6.3V X5R 0402-1 ROOM=PMU
C1826 15UF 20% 6.3V X5R 0402-1 ROOM=PMU
C1832 15UF 20% 6.3V X5R 0402-1 ROOM=PMU
C1838 15UF 20% 6.3V X5R 0402-1 ROOM=PMU
C1843 15UF 20% 6.3V X5R 0402-1 ROOM=PMU
C1845 15UF 20% 6.3V X5R 0402-1 ROOM=PMU
C1872 220PF 5% 10V C0G-CERM 01005 ROOM=PMU
BUCK1
13.4A MAX
L1810 1.0UH-20%-3.6A-0.060OHM PIQA20161T-SM ROOM=PMU
L1811 0.22UH-20%-6.7A-0.023OHM PINA20121T-SM ROOM=PMU
L1812 0.22UH-20%-6.7A-0.023OHM PINA20121T-SM ROOM=PMU
L1813 0.22UH-20%-6.7A-0.023OHM PINA20121T-SM ROOM=PMU
BUCK1_LX0
BUCK1_LX1
BUCK1_LX2
BUCK1_LX3
BUCK1_FB
BUCK1_PP_GPU_FB
PP_GPU_VAR
0.67V - 0.92V
1.03V for overdrive only
C1813 15UF 20% 6.3V X5R 0402-1 ROOM=PMU
C1820 15UF 20% 6.3V X5R 0402-1 ROOM=PMU
C1827 15UF 20% 6.3V X5R 0402-1 ROOM=PMU
C1833 15UF 20% 6.3V X5R 0402-1 ROOM=PMU
C1839 15UF 20% 6.3V X5R 0402-1 ROOM=PMU
C1865 15UF 20% 6.3V X5R 0402-1 ROOM=PMU
C1814 15UF 20% 6.3V X5R 0402-1 ROOM=PMU
C1821 15UF 20% 6.3V X5R 0402-1 ROOM=PMU
C1828 15UF 20% 6.3V X5R 0402-1 ROOM=PMU
C1834 15UF 20% 6.3V X5R 0402-1 ROOM=PMU
C1866 15UF 20% 6.3V X5R 0402-1 ROOM=PMU
C1873 220PF 5% 10V C0G-CERM 01005 ROOM=PMU
BUCK2
4.7A MAX
L1814 1.0UH-20%-3.6A-0.060OHM PIQA20161T-SM ROOM=PMU
L1815 0.47UH-20%-3.8A-0.048OHM PIQA20121T-SM ROOM=PMU
BUCK2_LX0
BUCK2_LX1
BUCK2_FB
BUCK2_PP_SOC_FB
PP_SOC_VAR
0.67V/0.80V
C1822 15UF 20% 6.3V X5R 0402-1 ROOM=PMU
C1829 15UF 20% 6.3V X5R 0402-1 ROOM=PMU
C1835 15UF 20% 6.3V X5R 0402-1 ROOM=PMU
C1841 15UF 20% 6.3V X5R 0402-1 ROOM=PMU
C1864 15UF 20% 6.3V X5R 0402-1 ROOM=PMU
C1871 220PF 5% 10V C0G-CERM 01005 ROOM=PMU
BUCK3
1.7A MAX
(pending vendor qual)
L1816 1.0UH-20%-3.6A-0.060OHM PIQA20161T-SM ROOM=PMU
XW1804 SHORT-20L-0.05MM-SM ROOM=SOC
BUCK3_LX0
BUCK3_FB
VBUCK3_SW
PP1V8_SDRAM
C1816 15UF 20% 6.3V X5R 0402-1 ROOM=PMU
C1823 15UF 20% 6.3V X5R 0402-1 ROOM=PMU
C1860 220PF 5% 10V C0G-CERM 01005 ROOM=PMU
BUCK4
4.7A MAX
L1817 1.0UH-20%-3.6A-0.060OHM PIQA20161T-SM ROOM=PMU
L1818 0.47UH-20%-3.8A-0.048OHM PIQA20121T-SM ROOM=PMU
XW1805 SHORT-20L-0.05MM-SM ROOM=SOC
BUCK4_LX0
BUCK4_LX1
BUCK4_FB
VBUCK4_SW
PP1V1_SDRAM
C1830 15UF 20% 6.3V X5R 0402-1 ROOM=PMU
C1836 15UF 20% 6.3V X5R 0402-1 ROOM=PMU
C1802 15UF 20% 6.3V X5R 0402-1 ROOM=PMU
C1874 15UF 20% 6.3V X5R 0402-1 ROOM=PMU
C1861 220PF 5% 10V C0G-CERM 01005 ROOM=PMU
SWITCH OUTPUTS
BUCK3_SW1
BUCK3_SW2
BUCK3_SW3
BUCK4_SW1
PP1V8
PP1V8_TOUCH
PP1V8_MAGGIE_TMU
PP1V1
BUCK5
3.2A MAX
D10/D101:#24681501,TY ONLY, D11/D11: Both Vendor
L1803 1.0UH-3.6A-0.060HM MEKK2016T-SM ROOM=PMU NO_XNET_CONNECTION=1
XW1802 SHORT-20L-0.05MM-SM ROOM=SOC
PP0V9_SOC_FIXED
BUCK5_LX0
BUCK5_FB
C1867 220PF 5% 10V C0G-CERM 01005 ROOM=PMU
C1840 15UF 20% 6.3V X5R 0402-1 ROOM=PMU
C1801 15UF 20% 6.3V X5R 0402-1 ROOM=PMU
C1803 15UF 20% 6.3V X5R 0402-1 ROOM=PMU
C1807 15UF 20% 6.3V X5R 0402-1 ROOM=PMU
BUCK6
1.5A MAX
L1804 1UH-20%-2.1A-0.120HM PIQA20121T-SM ROOM=PMU
XW1807 SHORT-20L-0.05MM-SM ROOM=SOC
PP1V25_BUCK
BUCK6_LX0
BUCK6_FB
C1811 220PF 5% 10V C0G-CERM 01005 ROOM=PMU
C1804 15UF 20% 6.3V X5R 0402-1 ROOM=PMU
C1808 15UF 20% 6.3V X5R 0402-1 ROOM=PMU
BUCK7
1.5A MAX
L1805 1.0UH-20%-2.25A-0.086OHM MCFE2016T-SM ROOM=PMU
XW1803 SHORT-20L-0.05MM-SM ROOM=SOC
PP_CPU_SRAM_VAR
0.80V - 1.06V
BUCK7_LX0
BUCK7_FB
C1868 220PF 5% 10V C0G-CERM 01005 ROOM=PMU
C1805 15UF 20% 6.3V X5R 0402-1 ROOM=PMU
C1809 15UF 20% 6.3V X5R 0402-1 ROOM=PMU
BUCK8
1.5A MAX
L1801 1UH-20%-2.1A-0.120HM PIQA20121T-SM ROOM=PMU
XW1801 SHORT-20L-0.05MM-SM ROOM=SOC
PP_GPU_SRAM_VAR
0.80V - 0.92V
BUCK8_LX0
BUCK8_FB
C1869 220PF 5% 10V C0G-CERM 01005 ROOM=PMU
C1806 15UF 20% 6.3V X5R 0402-1 ROOM=PMU
C1810 15UF 20% 6.3V X5R 0402-1 ROOM=PMU
BUCK9
0.75A MAX
L1802 1.0UH-20%-1.5A-0.161OHM 0603
XW1806 SHORT-20L-0.05MM-SM ROOM=SOC
PP2V8_UT_AF_VAR
BUCK9_LX0
BUCK9_FB
C1870 220PF 5% 10V C0G-CERM 01005 ROOM=PMU
C1862 15UF 20% 6.3V X5R 0402-1 ROOM=PMU
C1863 15UF 20% 6.3V X5R 0402-1 ROOM=PMU
PAGE TITLE
SYSTEM POWER:PMU (1/3)
Apple Inc.
DRAWING NUMBER 051-00542
SIZE D
REVISION 5.0.0
BRANCH
PAGE 18 OF 53
SHEET 18 OF 81
NOTICE OF PROPRIETARY PROPERTY:
THE INFORMATION CONTAINED HEREIN IS THE PROPRIETARY PROPERTY OF APPLE INC.
THE POSESSOR AGREES TO THE FOLLOWING:
I TO MAINTAIN THIS DOCUMENT IN CONFIDENCE
II NOT TO REPRODUCE OR COPY IT
III NOT TO REVEAL OR PUBLISH IT IN WHOLE OR PART
IV ALL RIGHTS RESERVED

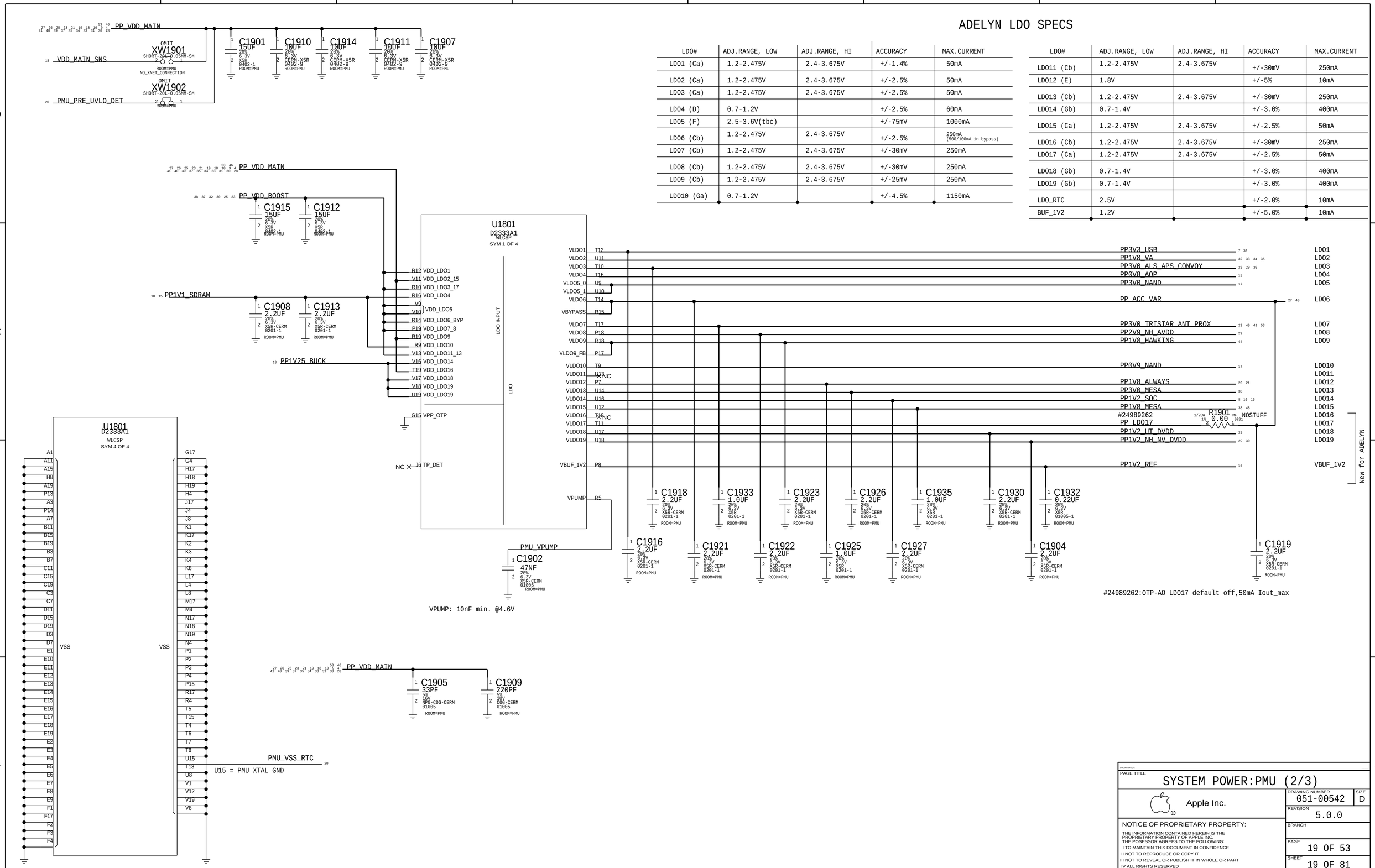

ADELYN LDO SPECS

LDO#	ADJ.RANGE, LOW	ADJ.RANGE, HI	ACCURACY	MAX.CURRENT
LD01 (Ca)	1.2-2.475V	2.4-3.675V	+/-1.4%	50mA
LD02 (Ca)	1.2-2.475V	2.4-3.675V	+/-2.5%	50mA
LD03 (Ca)	1.2-2.475V	2.4-3.675V	+/-2.5%	50mA
LD04 (D)	0.7-1.2V		+/-2.5%	60mA
LD05 (F)	2.5-3.6V(tbc)		+/-75mV	1000mA
LD06 (Cb)	1.2-2.475V	2.4-3.675V	+/-2.5%	250mA (500/100mA in bypass)
LD07 (Cb)	1.2-2.475V	2.4-3.675V	+/-30mV	250mA
LD08 (Cb)	1.2-2.475V	2.4-3.675V	+/-30mV	250mA
LD09 (Cb)	1.2-2.475V	2.4-3.675V	+/-25mV	250mA
LD010 (Ga)	0.7-1.2V		+/-4.5%	1150mA

LDO#	ADJ.RANGE, LOW	ADJ.RANGE, HI	ACCURACY	MAX.CURRENT
LD011 (Cb)	1.2-2.475V	2.4-3.675V	+/-30mV	250mA
LD012 (E)	1.8V		+/-5%	10mA
LD013 (Cb)	1.2-2.475V	2.4-3.675V	+/-30mV	250mA
LD014 (Gb)	0.7-1.4V		+/-3.0%	400mA
LD015 (Ca)	1.2-2.475V	2.4-3.675V	+/-2.5%	50mA
LD016 (Cb)	1.2-2.475V	2.4-3.675V	+/-30mV	250mA
LD017 (Ca)	1.2-2.475V	2.4-3.675V	+/-2.5%	50mA
LD018 (Gb)	0.7-1.4V		+/-3.0%	400mA
LD019 (Gb)	0.7-1.4V		+/-3.0%	400mA
LDO_RTC	2.5V		+/-2.0%	10mA
BUF_1V2	1.2V		+/-5.0%	10mA

PAGE TITLE
SYSTEM POWER:PMU (2/3)

Apple Inc.

DRAWING NUMBER 051-00542
SIZE D
REVISION 5.0.0
BRANCH
PAGE 19 OF 53
SHEET 19 OF 81

NOTICE OF PROPRIETARY PROPERTY:
THE INFORMATION CONTAINED HEREIN IS THE PROPRIETARY PROPERTY OF APPLE INC.
THE POSESSOR AGREES TO THE FOLLOWING:
I TO MAINTAIN THIS DOCUMENT IN CONFIDENCE
II NOT TO REPRODUCE OR COPY IT
III NOT TO REVEAL OR PUBLISH IT IN WHOLE OR PART
IV ALL RIGHTS RESERVED

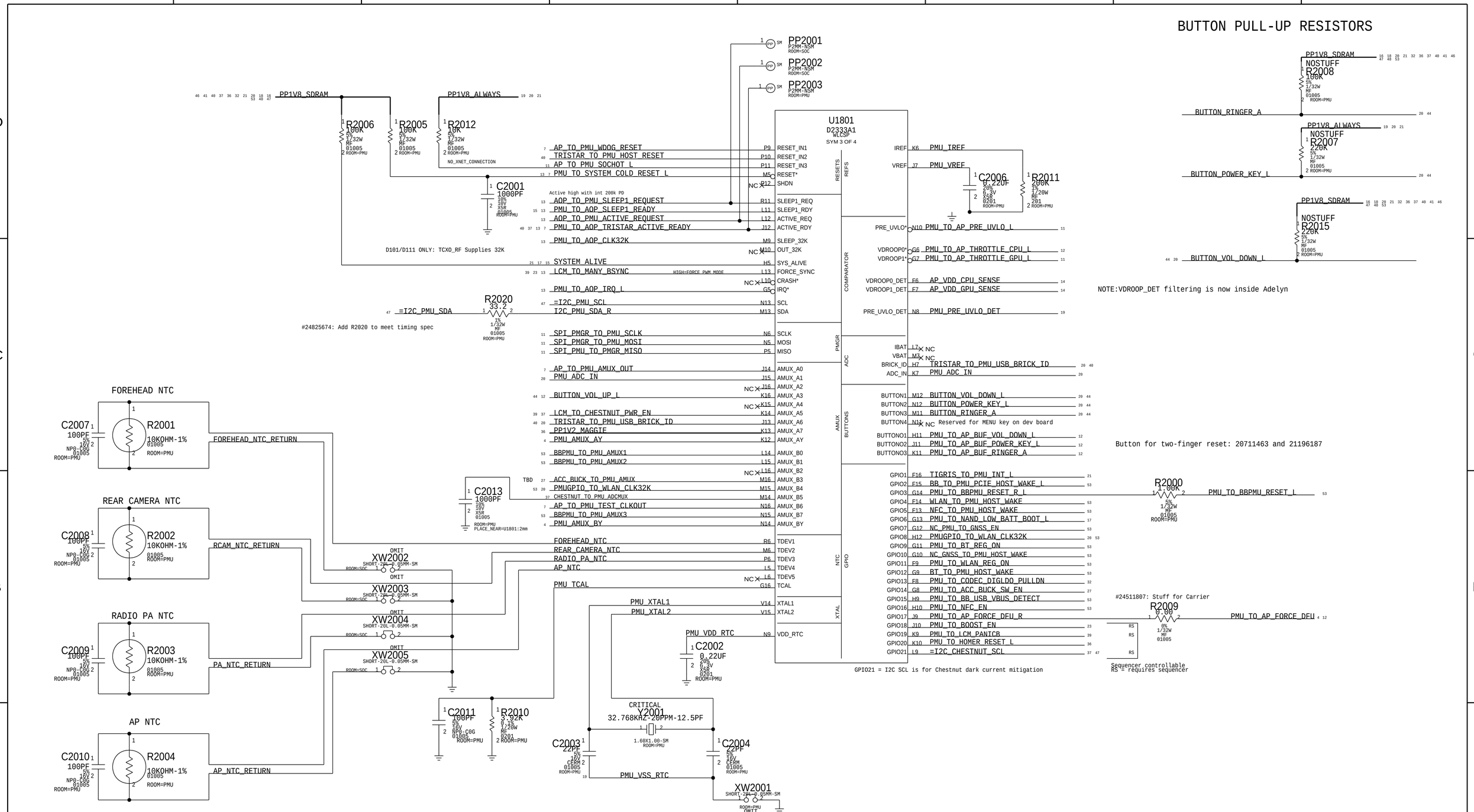

PAGE TITLE
SYSTEM POWER:PMU (3/3)

Apple Inc.

DRAWING NUMBER 051-00542 SIZE D
REVISION 5.0.0
BRANCH
PAGE 20 OF 53
SHEET 20 OF 81

NOTICE OF PROPRIETARY PROPERTY:
THE INFORMATION CONTAINED HEREIN IS THE PROPRIETARY PROPERTY OF APPLE INC.
THE POSESSOR AGREES TO THE FOLLOWING:
I TO MAINTAIN THIS DOCUMENT IN CONFIDENCE
II NOT TO REPRODUCE OR COPY IT
III NOT TO REVEAL OR PUBLISH IT IN WHOLE OR PART
IV ALL RIGHTS RESERVED

TIGRIS CHARGER

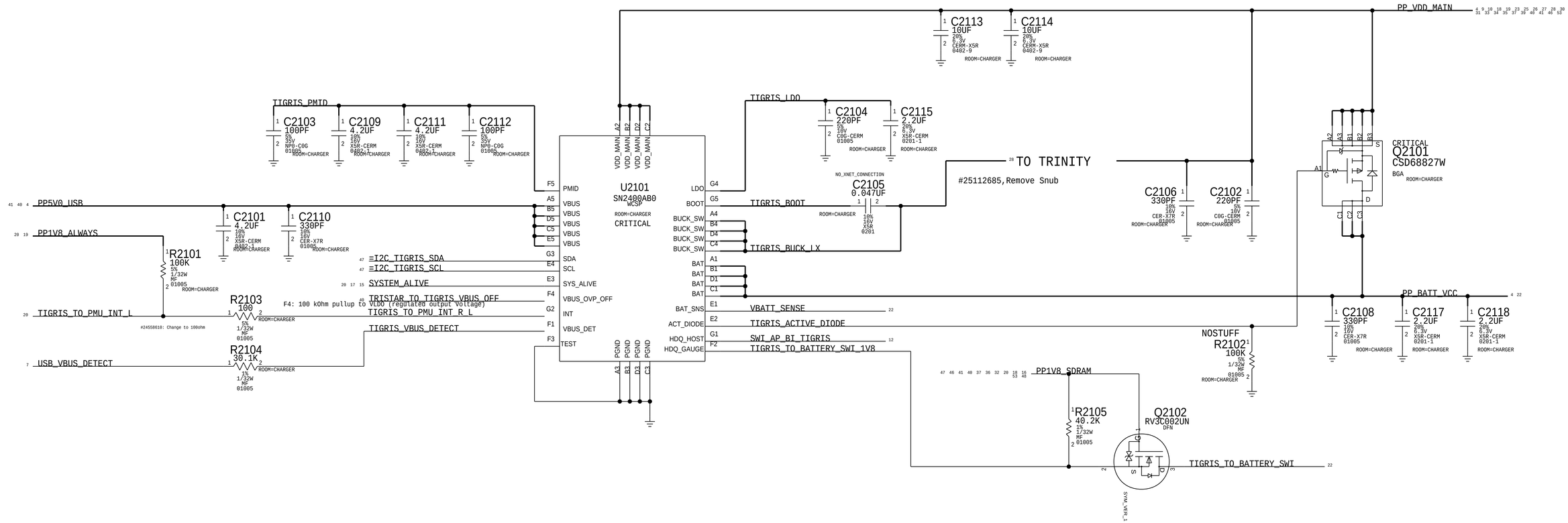

PAGE TITLE

SYSTEM POWER:CHARGER

Apple Inc.

DRAWING NUMBER 051-00542 SIZE D

REVISION 5.0.0

BRANCH

PAGE 21 OF 53

SHEET 21 OF 81

NOTICE OF PROPRIETARY PROPERTY:

THE INFORMATION CONTAINED HEREIN IS THE PROPRIETARY PROPERTY OF APPLE INC.
THE POSESSOR AGREES TO THE FOLLOWING:
I TO MAINTAIN THIS DOCUMENT IN CONFIDENCE
II NOT TO REPRODUCE OR COPY IT
III NOT TO REVEAL OR PUBLISH IT IN WHOLE OR PART
IV ALL RIGHTS RESERVED

BATTERY CONNECTOR

THIS ONE ON MLB ---> 516S00172 (matches d10 mlb MCO rev 27)

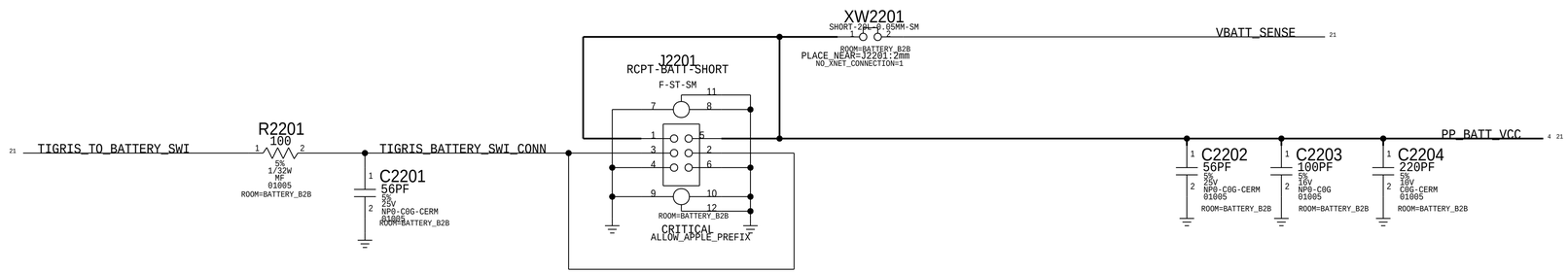

PAGE TITLE

SYSTEM POWER:BATTERY CONN

Apple Inc.

DRAWING NUMBER	051-00542
SIZE	D
REVISION	5.0.0
BRANCH	
PAGE	22 OF 53
SHEET	22 OF 81

NOTICE OF PROPRIETARY PROPERTY:

THE INFORMATION CONTAINED HEREIN IS THE PROPRIETARY PROPERTY OF APPLE INC.
THE POSESSOR AGREES TO THE FOLLOWING:

I TO MAINTAIN THIS DOCUMENT IN CONFIDENCE

II NOT TO REPRODUCE OR COPY IT

III NOT TO REVEAL OR PUBLISH IT IN WHOLE OR PART

IV ALL RIGHTS RESERVED

BOOST

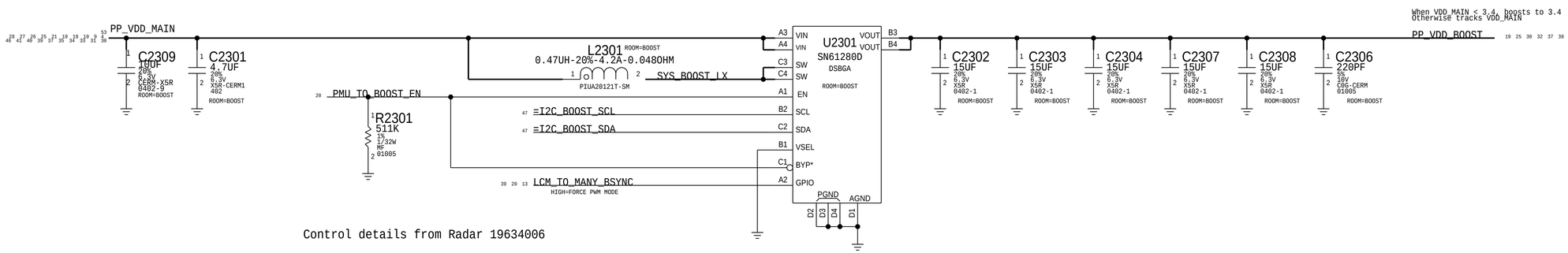

Control details from Radar 19634006

PAGE TITLE

SYSTEM POWER:BOOST

Apple Inc.

DRAWING NUMBER 051-00542 SIZE D

REVISION 5.0.0

BRANCH

PAGE 23 OF 53

SHEET 23 OF 81

NOTICE OF PROPRIETARY PROPERTY:

THE INFORMATION CONTAINED HEREIN IS THE PROPRIETARY PROPERTY OF APPLE INC.
THE POSESSOR AGREES TO THE FOLLOWING:
I TO MAINTAIN THIS DOCUMENT IN CONFIDENCE
II NOT TO REPRODUCE OR COPY IT
III NOT TO REVEAL OR PUBLISH IT IN WHOLE OR PART
IV ALL RIGHTS RESERVED

CARBON - ACCEL & GYRO

INVENSENSE, MPU-6800: C2403=0.1UF

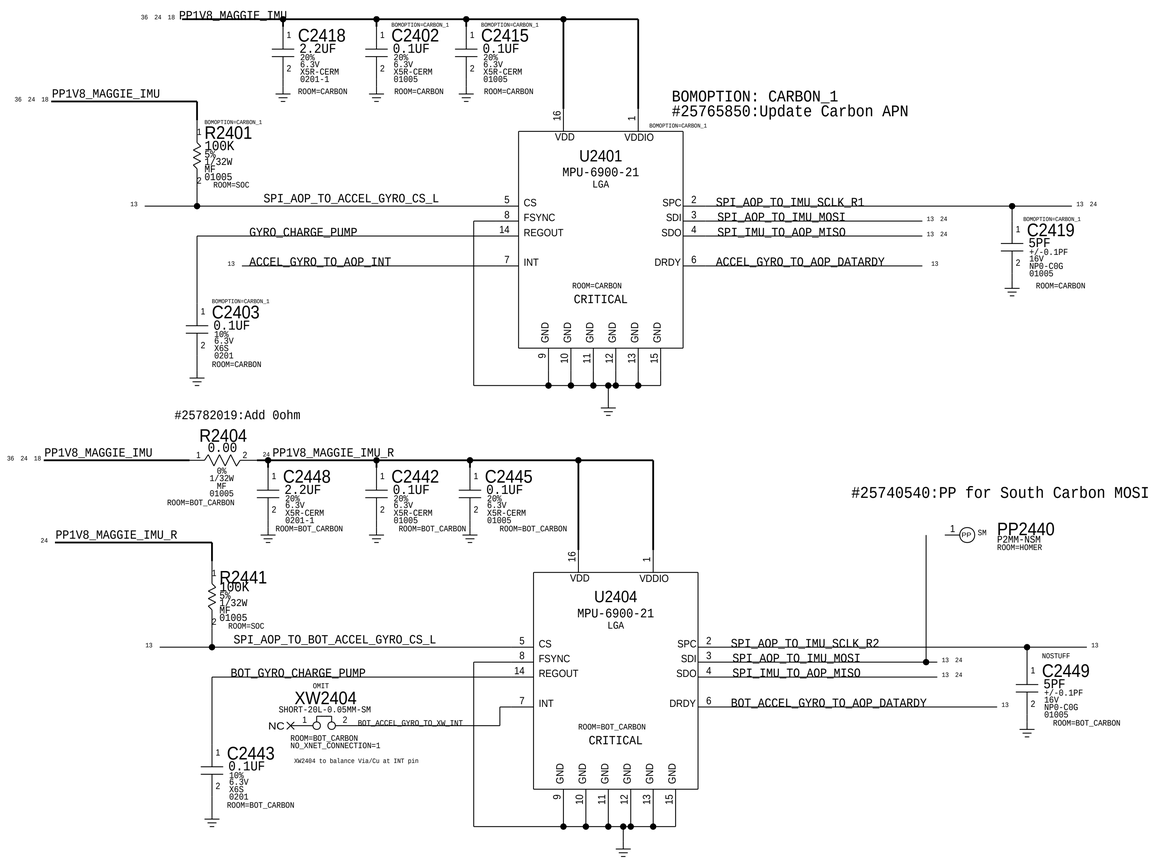

#25782019:Add 0ohm

#25740540:PP for South Carbon MOSI

MAGNESIUM - COMPASS

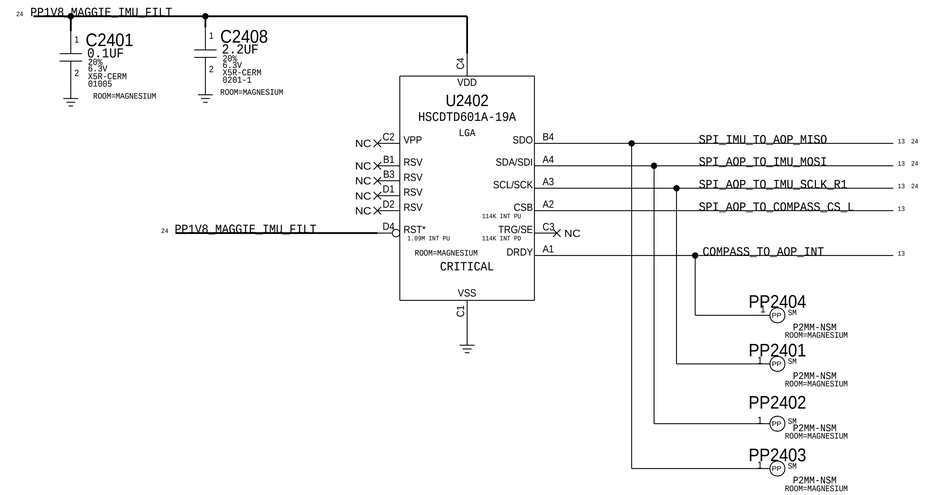

PHOSPHORUS

#24593845

BOSCH (APN:338S00188): nostuff C2420/C2421/C2422/C2423 and R2403 PU
ST (APN:338S00230): stuff C2420-C2423, C2420R2422 with 155S00017, stuff R2403 PU
C2420=4pF(131S0253),C2405=3pF(131S0251) per #25691124

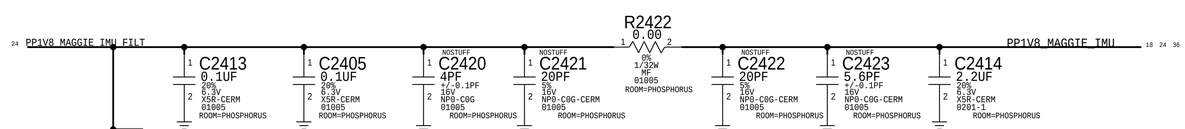

nostuff due to layout

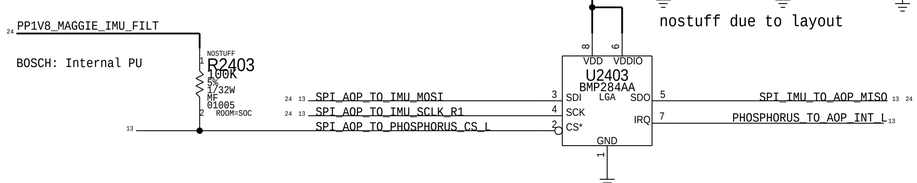

PAGE TITLE

SENSORS

Apple Inc.

DRAWING NUMBER 051-00542 SIZE D

REVISION 5.0.0

BRANCH

PAGE 24 OF 53

SHEET 24 OF 81

NOTICE OF PROPRIETARY PROPERTY:

THE INFORMATION CONTAINED HEREIN IS THE PROPRIETARY PROPERTY OF APPLE INC. THE POSESSOR AGREES TO THE FOLLOWING:

I TO MAINTAIN THIS DOCUMENT IN CONFIDENCE

II NOT TO REPRODUCE OR COPY IT

III NOT TO REVEAL OR PUBLISH IT IN WHOLE OR PART

IV ALL RIGHTS RESERVED

UTAH POWER

Scrub voltage selection

NOTE: OUTPUT IMPDEANCE MUST BE >0.005-OHM
IN ORDER TO MEET CAP ESR REQUIREMENT PER LDO SPEC.
VENDOR ALSO RECOMMENDS CIN = COUT FOR STABILITY

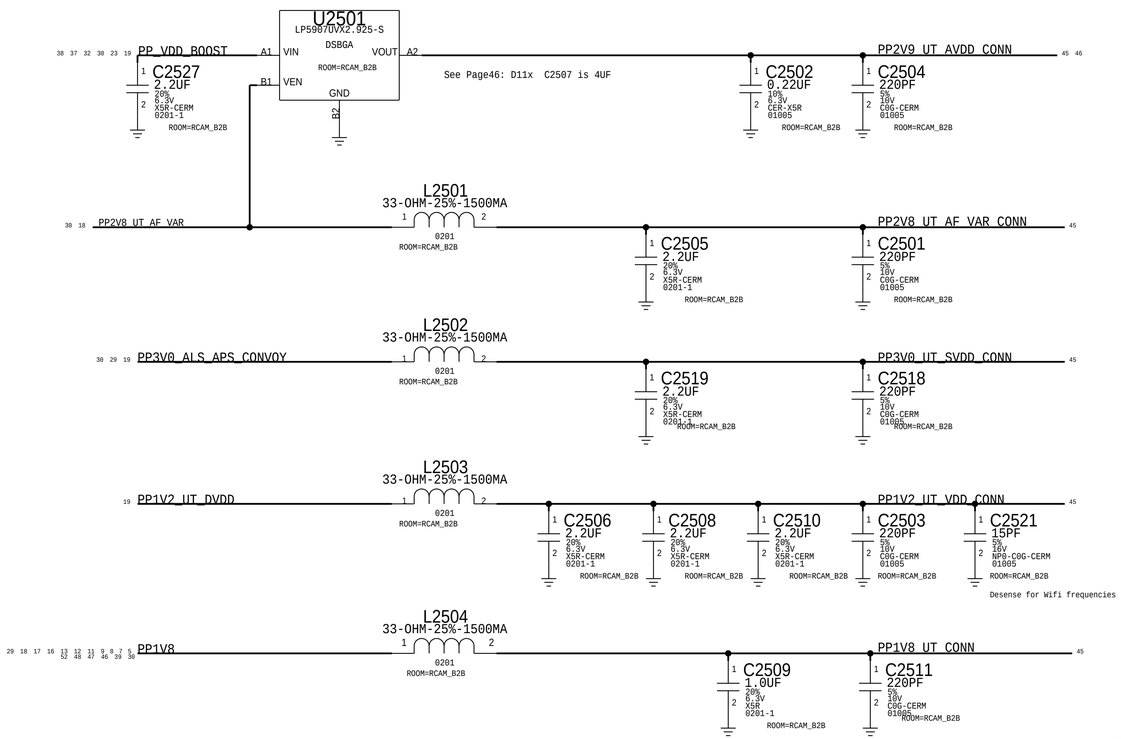

IO FILTERS

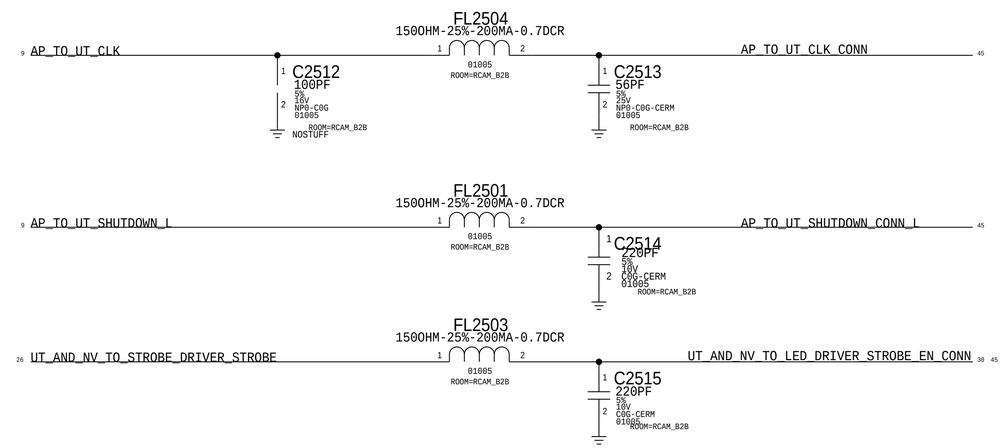

LPDP FILTERS

AC return path for LPDP which is referenced to GND and VDD_MAIN

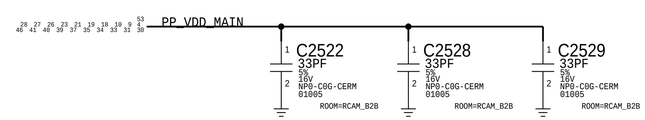

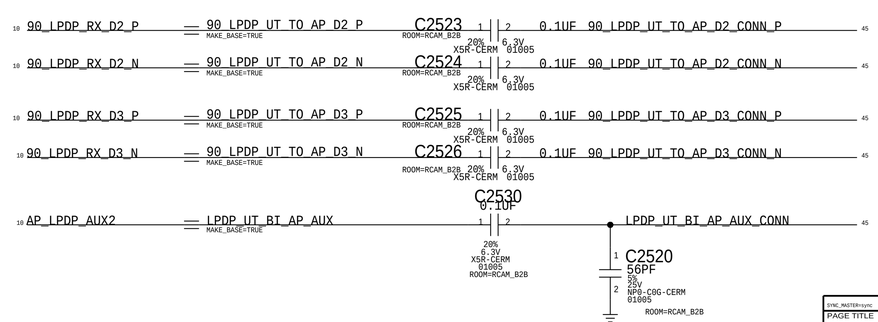

SYNC_MASTER=sync SYNC_DATE=04/28/2014

PAGE TITLE

B2B FILTERS: UTAH

Apple Inc.

DRAWING NUMBER 051-00542 SIZE D

REVISION 5.0.0

BRANCH

PAGE 25 OF 53

SHEET 25 OF 81

NOTICE OF PROPRIETARY PROPERTY:

THE INFORMATION CONTAINED HEREIN IS THE PROPRIETARY PROPERTY OF APPLE INC.
THE POSESSOR AGREES TO THE FOLLOWING:
I TO MAINTAIN THIS DOCUMENT IN CONFIDENCE
II NOT TO REPRODUCE OR COPY IT
III NOT TO REVEAL OR PUBLISH IT IN WHOLE OR PART
IV ALL RIGHTS RESERVED

STROBE DRIVERS INSIDE NEO SIP MODULE

D10/sip_neo

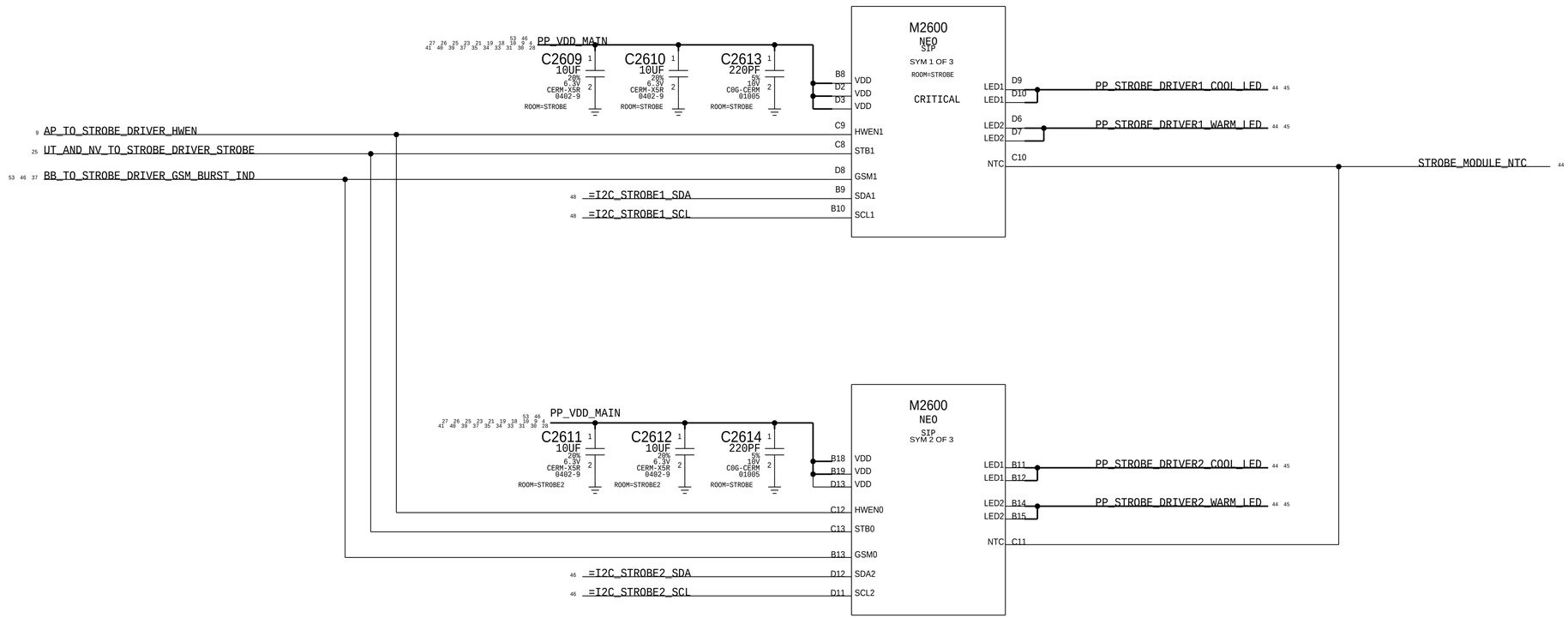

CDS_LIB=apple

PAGE TITLE

CAMERA:STROBE DRIVER

Apple Inc.

DRAWING NUMBER 051-00542

SIZE D

REVISION 5.0.0

BRANCH

PAGE 26 OF 53

SHEET 26 OF 81

NOTICE OF PROPRIETARY PROPERTY:

THE INFORMATION CONTAINED HEREIN IS THE PROPRIETARY PROPERTY OF APPLE INC.
THE POSESSOR AGREES TO THE FOLLOWING:
I TO MAINTAIN THIS DOCUMENT IN CONFIDENCE
II NOT TO REPRODUCE OR COPY IT
III NOT TO REVEAL OR PUBLISH IT IN WHOLE OR PART
IV ALL RIGHTS RESERVED

ACCESSORY BUCK

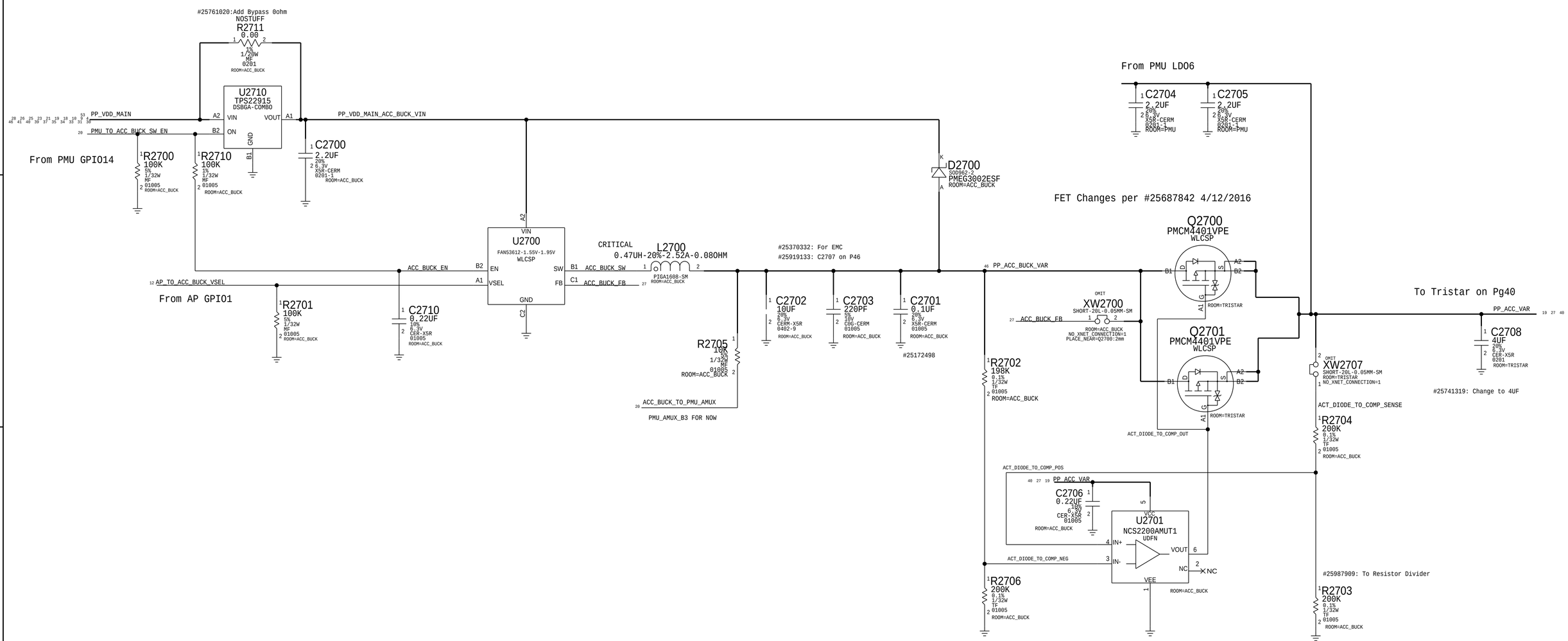

SYNC_MASTER=sync SYNC_DATE=04/28/2016

PAGE TITLE
Accessory: Buck Circuit

Apple Inc.

DRAWING NUMBER 051-00542 SIZE D

REVISION 5.0.0

BRANCH

PAGE 27 OF 53

SHEET 27 OF 81

NOTICE OF PROPRIETARY PROPERTY:
THE INFORMATION CONTAINED HEREIN IS THE PROPRIETARY PROPERTY OF APPLE INC.
THE POSESSOR AGREES TO THE FOLLOWING:
I TO MAINTAIN THIS DOCUMENT IN CONFIDENCE
II NOT TO REPRODUCE OR COPY IT
III NOT TO REVEAL OR PUBLISH IT IN WHOLE OR PART
IV ALL RIGHTS RESERVED

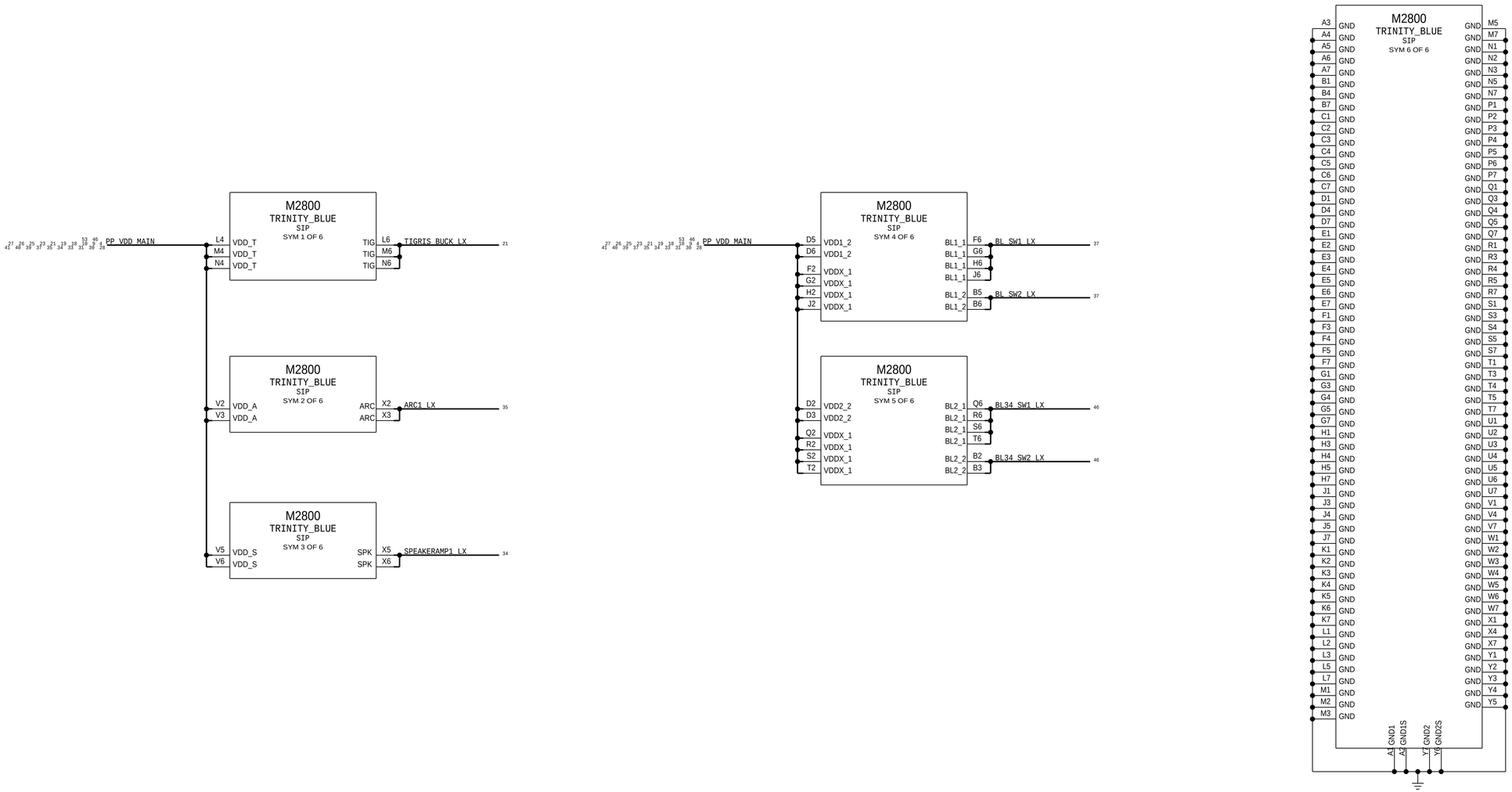

SYNC_MASTER=sync SYNC_DATE=04/28/2016

PAGE TITLE

TRINITY:FF SPECIFIC

Apple Inc.

DRAWING NUMBER 051-00542

SIZE D

REVISION 5.0.0

BRANCH

PAGE 28 OF 53

SHEET 28 OF 81

NOTICE OF PROPRIETARY PROPERTY:

THE INFORMATION CONTAINED HEREIN IS THE PROPRIETARY PROPERTY OF APPLE INC.
THE POSESSOR AGREES TO THE FOLLOWING:
I TO MAINTAIN THIS DOCUMENT IN CONFIDENCE
II NOT TO REPRODUCE OR COPY IT
III NOT TO REVEAL OR PUBLISH IT IN WHOLE OR PART
IV ALL RIGHTS RESERVED

NEW HAMPSHIRE POWER

PP1V8 — FL2901 33-OHM-25%-1500MA (0201, ROOM=FOREHEAD) — PP1V8_NH_TO_CONN
- C2914 0.1UF 20% 6.3V X5R-CERM 01005 ROOM=FOREHEAD
- C2902 220PF 5% 10V C0G-CERM 01005 ROOM=FOREHEAD

PP1V2_NH_NV_DVDD — FL2902 33-OHM-25%-1500MA (0201, ROOM=FOREHEAD) — PP1V2_NH_DVDD_CONN
- C2916 2.2UF 20% 6.3V X5R-CERM 0201-1 ROOM=FOREHEAD
- C2915 0.1UF 20% 6.3V X5R-CERM 01005 ROOM=FOREHEAD
- C2903 220PF 5% 10V C0G-CERM 01005 ROOM=FOREHEAD

PP2V9_NH_AVDD — FL2903 10-OHM-750MA (01005-1, ROOM=FOREHEAD) — PP2V9_NH_AVDD_CONN
- C2909 2.2UF 20% 6.3V X5R-CERM 0201-1 ROOM=FOREHEAD
- C2901 0.1UF 20% 6.3V X5R-CERM 01005 ROOM=FOREHEAD
- C2904 220PF 5% 10V C0G-CERM 01005 ROOM=FOREHEAD

NEW HAMPSHIRE I/O

AP_TO_NH_CLK — FL2907 1500HM-25%-200MA-0.7DCR (01005, ROOM=FOREHEAD) — AP_TO_NH_CLK_CONN
- C2910 56PF 5% 25V NP0-C0G-CERM 01005 ROOM=FOREHEAD

AP_TO_NH_SHUTDOWN_L — FL2908 1500HM-25%-200MA-0.7DCR (01005, ROOM=FOREHEAD) — AP_TO_NH_SHUTDOWN_CONN_L
- C2911 220PF 5% 10V C0G-CERM 01005 ROOM=FOREHEAD

CONVOY I/O

PDM_ADARE_TO_CONVOY_CLK — FL2905 100 5% 1/32W MF 01005 ROOM=FOREHEAD — PDM_ADARE_TO_CONVOY_CLK_CONN
- C2905 56PF 5% 25V NP0-C0G-CERM 01005 ROOM=FOREHEAD

PDM_CONVOY_TO_ADARE_DATA — FL2906 1500HM-25%-200MA-0.7DCR (01005, ROOM=FOREHEAD) — PDM_CONVOY_TO_ADARE_DATA_CONN
- C2906 56PF 5% 25V NP0-C0G-CERM 01005 ROOM=FOREHEAD

PROX/ALS I/O

#25170697: R2915 to 240ohm/C2921 to 220pF

PROX_BI_AP_AOP_INT_PWM_L — R2915 240 1% 1/32W MF 01005 ROOM=FOREHEAD — PROX_BI_AP_AOP_INT_PWM_L_CONN
- C2921 220PF 5% 10V C0G-CERM 01005 ROOM=FOREHEAD

ALS_TO_AP_INT_L — FL2911 1500HM-25%-200MA-0.7DCR (01005, ROOM=FOREHEAD) — ALS_TO_AP_INT_CONN_L
- C2924 56PF 5% 25V NP0-C0G-CERM 01005 ROOM=FOREHEAD

PROX, ALS, & CONVOY POWER

PP3V0_ALS_APS_CONVOY — FL2913 1500HM-25%-200MA-0.7DCR (01005, ROOM=FOREHEAD) — PP3V0_ALS_CONVOY_CONN
- C2917 2.2UF 20% 6.3V X5R-CERM 0201-1 ROOM=FOREHEAD
- C2926 220PF 5% 10V C0G-CERM 01005 ROOM=FOREHEAD

PP3V0_TRISTAR_ANT_PROX — FL2910 1500HM-25%-200MA-0.7DCR (01005, ROOM=FOREHEAD) — PP3V0_PROX_CONN

#24511567: Remove C2918

- C2927 2.2UF 20% 6.3V X5R-CERM 0201-1 ROOM=FOREHEAD
- C2908 220PF 5% 10V C0G-CERM 01005 ROOM=FOREHEAD

SPEAKER2

SPEAKERAMP2_TO_SPEAKER_OUT_POS
- C2932 220PF 5% 10V C0G-CERM 01005 ROOM=FOREHEAD (NO_XNET_CONNECTION=1)

SPEAKERAMP2_TO_SPEAKER_OUT_NEG
- C2935 220PF 5% 10V C0G-CERM 01005 ROOM=FOREHEAD (NO_XNET_CONNECTION=1)
- C2931 220PF 5% 10V C0G-CERM 01005 ROOM=FOREHEAD (NO_XNET_CONNECTION=1)

SPEAKER_TO_SPEAKERAMP2_VSENSE_P — R2903 0.00 0% 1/32W MF 01005 ROOM=FOREHEAD — SPEAKER_TO_SPEAKERAMP2_VSENSE_CONN_P
- C2933 220PF 5% 10V C0G-CERM 01005 ROOM=FOREHEAD (NO_XNET_CONNECTION=1)

SPEAKER_TO_SPEAKERAMP2_VSENSE_N — R2904 0.00 0% 1/32W MF 01005 ROOM=FOREHEAD — SPEAKER_TO_SPEAKERAMP2_VSENSE_CONN_N
- C2934 220PF 5% 10V C0G-CERM 01005 ROOM=FOREHEAD (NO_XNET_CONNECTION=1)

MIC3

PP_CODEC_TO_FRONTMIC3_BIAS — FL2914 1500HM-25%-200MA-0.7DCR (01005, ROOM=FOREHEAD) — PP_CODEC_TO_FRONTMIC3_BIAS_CONN
- DZ2905 6.8V-100PF 01005 ROOM=FOREHEAD

FRONTMIC3_TO_CODEC_AIN4_N — FL2904 1500HM-25%-200MA-0.7DCR (01005, ROOM=FOREHEAD) — FRONTMIC3_TO_CODEC_AIN4_CONN_N
- DZ2906 6.8V-100PF 01005 ROOM=FOREHEAD (NO_XNET_CONNECTION=1)

FRONTMIC3_TO_CODEC_AIN4_P — FL2909 1500HM-25%-200MA-0.7DCR (01005, ROOM=FOREHEAD) — FRONTMIC3_TO_CODEC_AIN4_CONN_P
- DZ2907 6.8V-100PF 01005 ROOM=FOREHEAD (NO_XNET_CONNECTION=1)

PAGE TITLE: B2B:FOREHEAD

Apple Inc.

DRAWING NUMBER: 051-00542 SIZE: D

REVISION: 5.0.0

BRANCH

PAGE: 29 OF 53

SHEET: 29 OF 81

NOTICE OF PROPRIETARY PROPERTY:
THE INFORMATION CONTAINED HEREIN IS THE PROPRIETARY PROPERTY OF APPLE INC.
THE POSESSOR AGREES TO THE FOLLOWING:
I TO MAINTAIN THIS DOCUMENT IN CONFIDENCE
II NOT TO REPRODUCE OR COPY IT
III NOT TO REVEAL OR PUBLISH IT IN WHOLE OR PART
IV ALL RIGHTS RESERVED

NEVADA POWER

NOTE: OUTPUT IMPDEANCE MUST BE >0.005-OHM

IN ORDER TO MEET CAP ESR REQUIREMENT PER LDO SPEC.
VENDOR ALSO RECOMMENDS CIN = COUT FOR STABILITY

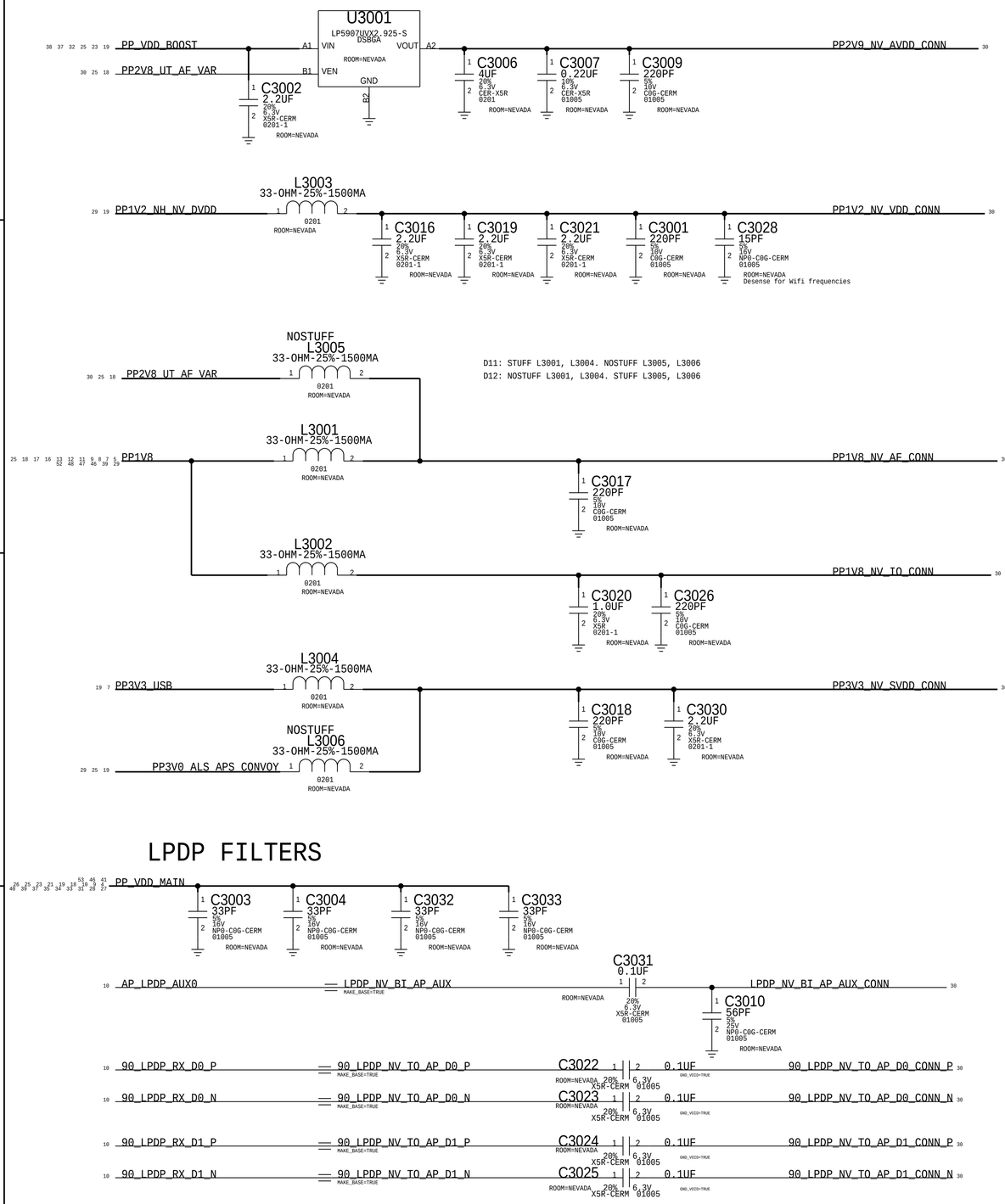

LPDP FILTERS

NEVADA CONNECTOR

THIS ONE ---> 516S00152 RCPT (USED ON MLB)
516S00151 PLUG

THIS PAGE UNIQUE TO LARGE FORM FACTOR
OTHER FORM FACTOR SPECIFIC PAGES:
4 - Mechanical
46 - FF Specific

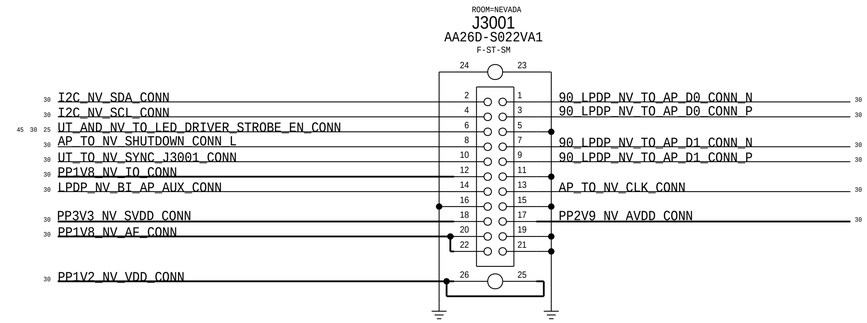

GPIO FILTERS

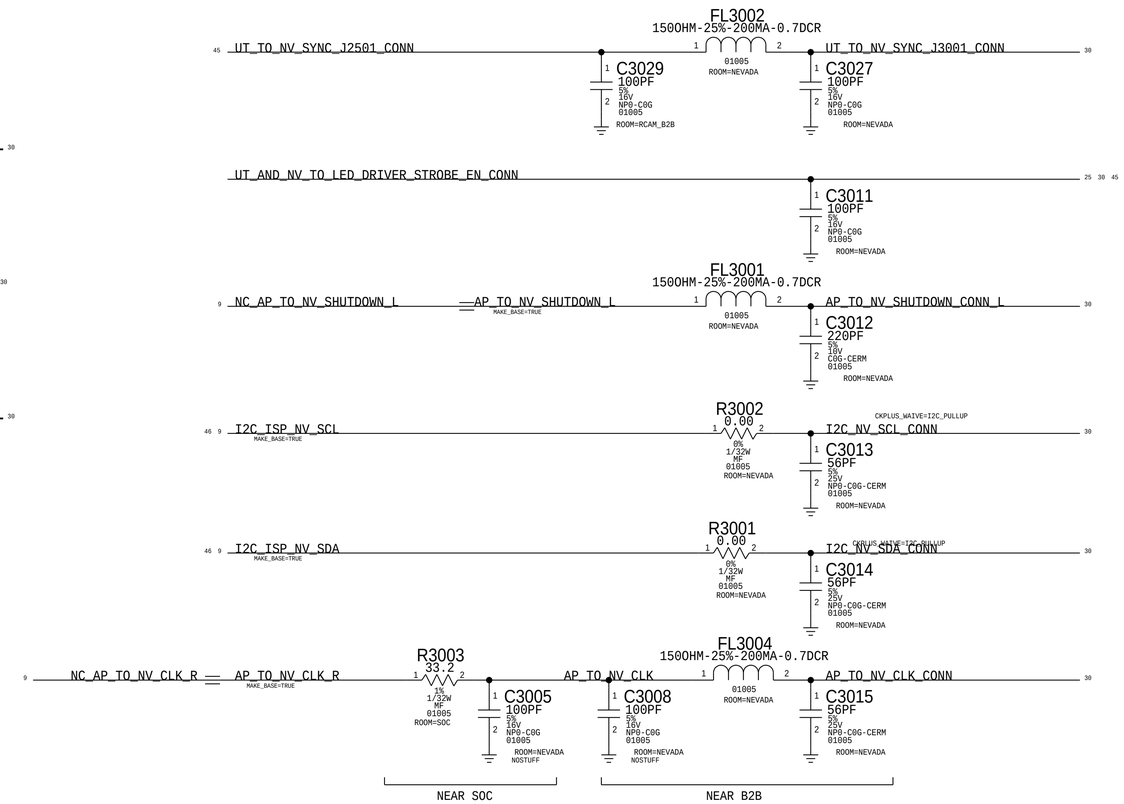

PAGE TITLE
B2B:NEVADA

Apple Inc.

DRAWING NUMBER 051-00542
SIZE D
REVISION 5.0.0
BRANCH
PAGE 30 OF 53
SHEET 30 OF 81

NOTICE OF PROPRIETARY PROPERTY:
THE INFORMATION CONTAINED HEREIN IS THE PROPRIETARY PROPERTY OF APPLE INC.
THE POSESSOR AGREES TO THE FOLLOWING:
I TO MAINTAIN THIS DOCUMENT IN CONFIDENCE
II NOT TO REPRODUCE OR COPY IT
III NOT TO REVEAL OR PUBLISH IT IN WHOLE OR PART
IV ALL RIGHTS RESERVED

CALTRA AUDIO CODEC (ANALOG INPUTS & OUTPUTS)

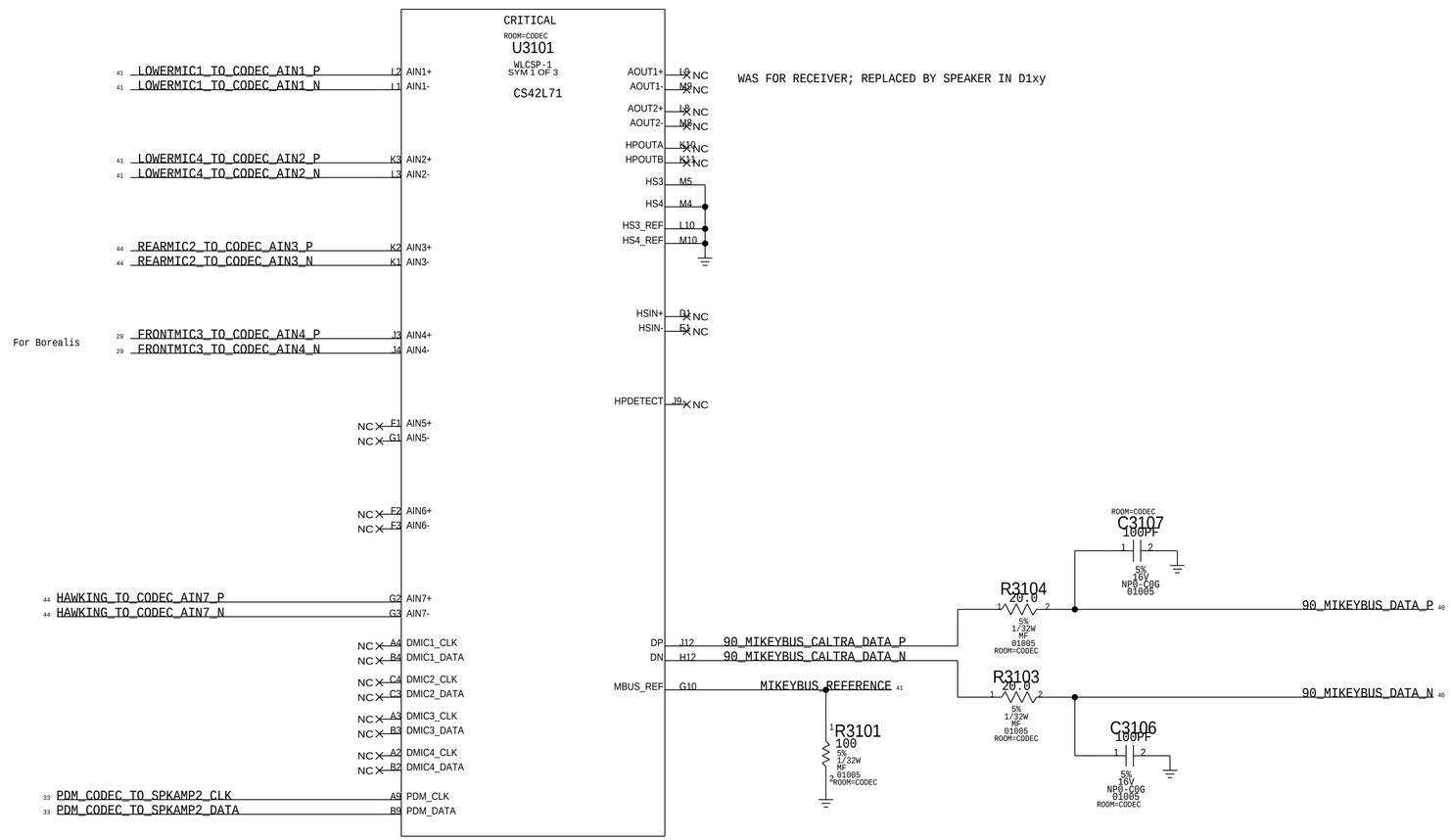

WAS FOR RECEIVER; REPLACED BY SPEAKER IN D1xy

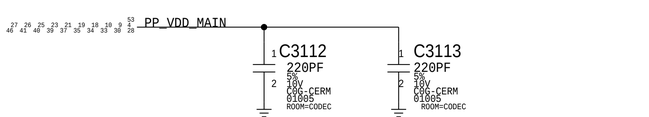

AC return path for Mikeybus which is referenced to GND and VDD_MAIN

Radar 21203307

PAGE TITLE
AUDIO:CALTRA CODEC (1/2)

Apple Inc.

DRAWING NUMBER 051-00542
SIZE D
REVISION 5.0.0
BRANCH
PAGE 31 OF 53
SHEET 31 OF 81

NOTICE OF PROPRIETARY PROPERTY:
THE INFORMATION CONTAINED HEREIN IS THE PROPRIETARY PROPERTY OF APPLE INC.
THE POSESSOR AGREES TO THE FOLLOWING:
I TO MAINTAIN THIS DOCUMENT IN CONFIDENCE
II NOT TO REPRODUCE OR COPY IT
III NOT TO REVEAL OR PUBLISH IT IN WHOLE OR PART
IV ALL RIGHTS RESERVED

CALTRA AUDIO CODEC (POWER & I/O)

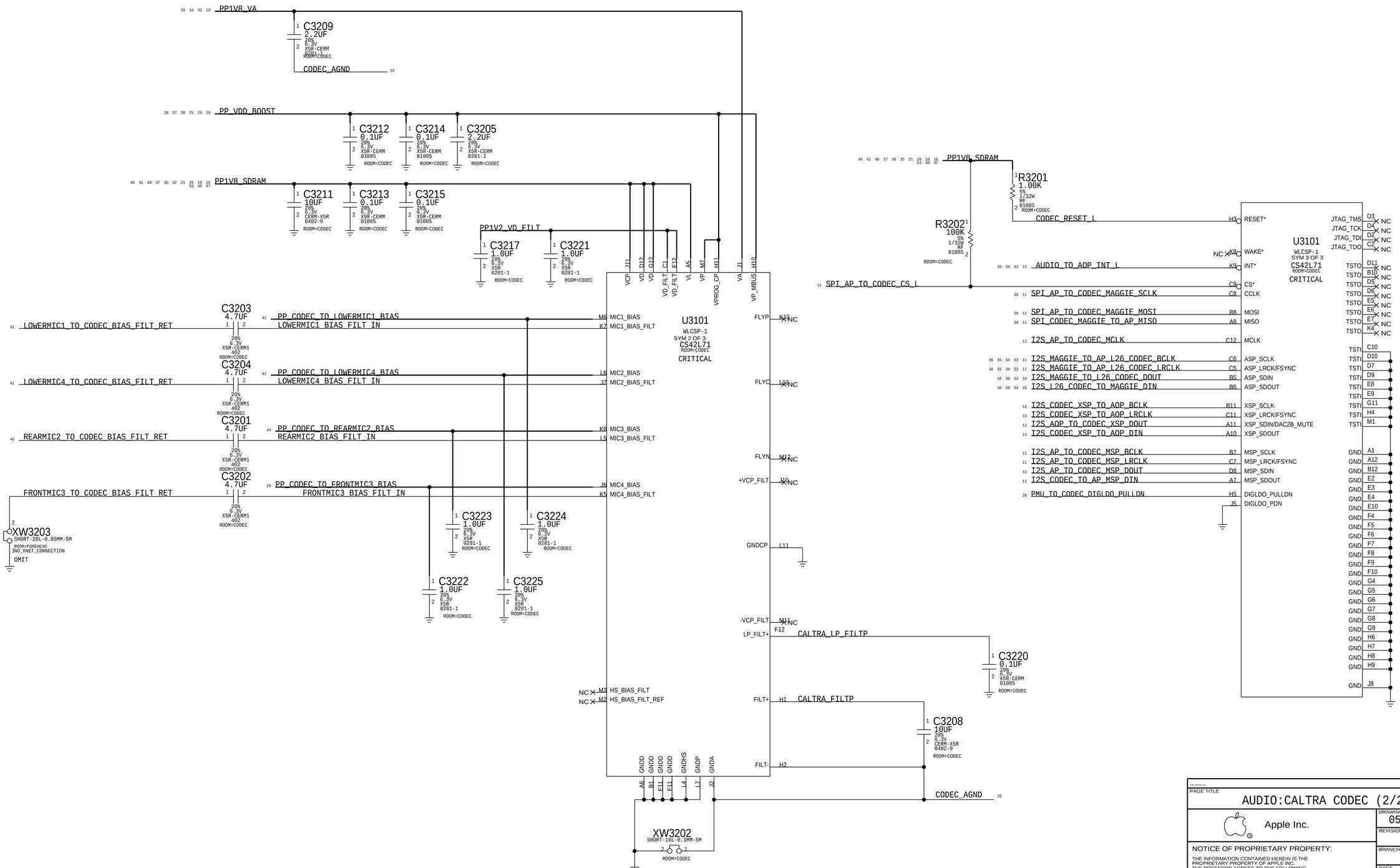

PAGE TITLE

AUDIO:CALTRA CODEC (2/2)

Apple Inc.

DRAWING NUMBER 051-00542 SIZE D

REVISION 5.0.0

BRANCH

PAGE 32 OF 53

SHEET 32 OF 81

NOTICE OF PROPRIETARY PROPERTY:

THE INFORMATION CONTAINED HEREIN IS THE PROPRIETARY PROPERTY OF APPLE INC. THE POSESSOR AGREES TO THE FOLLOWING:

I TO MAINTAIN THIS DOCUMENT IN CONFIDENCE

II NOT TO REPRODUCE OR COPY IT

III NOT TO REVEAL OR PUBLISH IT IN WHOLE OR PART

IV ALL RIGHTS RESERVED

SPEAKER AMPLIFIER 2 (North)

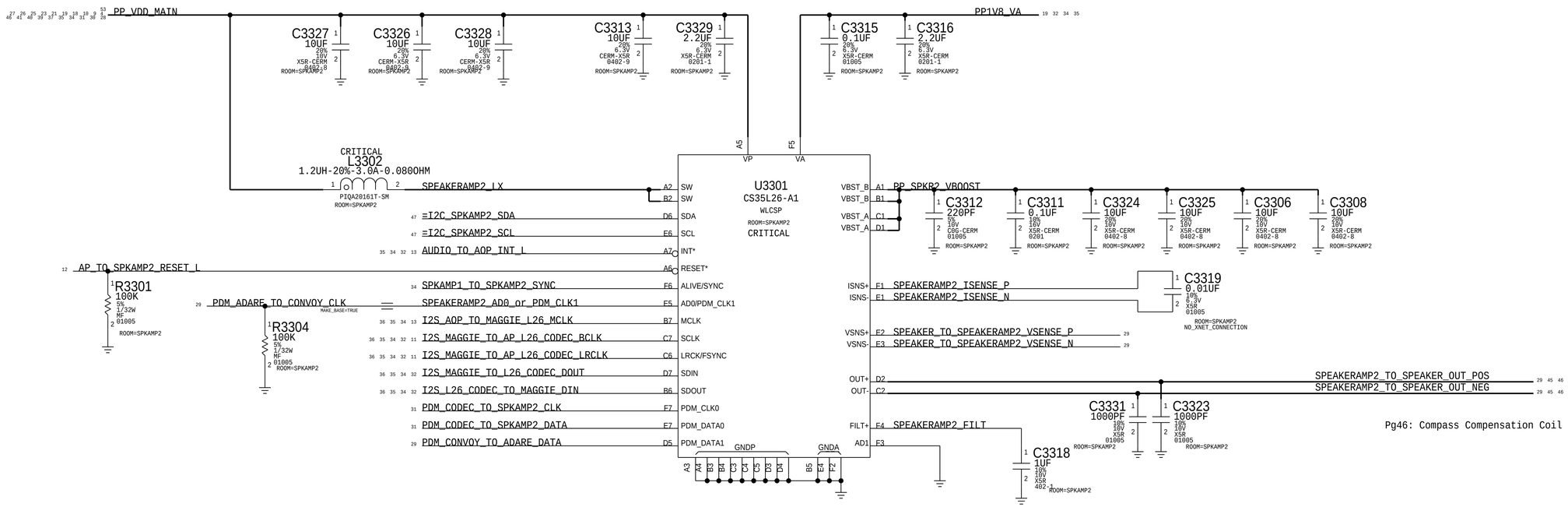

Pg46: Compass Compensation Coil

PAGE TITLE

AUDIO:SPEAKER AMP 2

Apple Inc.

DRAWING NUMBER 051-00542 SIZE D

REVISION 5.0.0

BRANCH

PAGE 33 OF 53

SHEET 33 OF 81

NOTICE OF PROPRIETARY PROPERTY:
THE INFORMATION CONTAINED HEREIN IS THE PROPRIETARY PROPERTY OF APPLE INC.
THE POSESSOR AGREES TO THE FOLLOWING:
I TO MAINTAIN THIS DOCUMENT IN CONFIDENCE
II NOT TO REPRODUCE OR COPY IT
III NOT TO REVEAL OR PUBLISH IT IN WHOLE OR PART
IV ALL RIGHTS RESERVED

SPEAKER AMPLIFIER 1

(South)

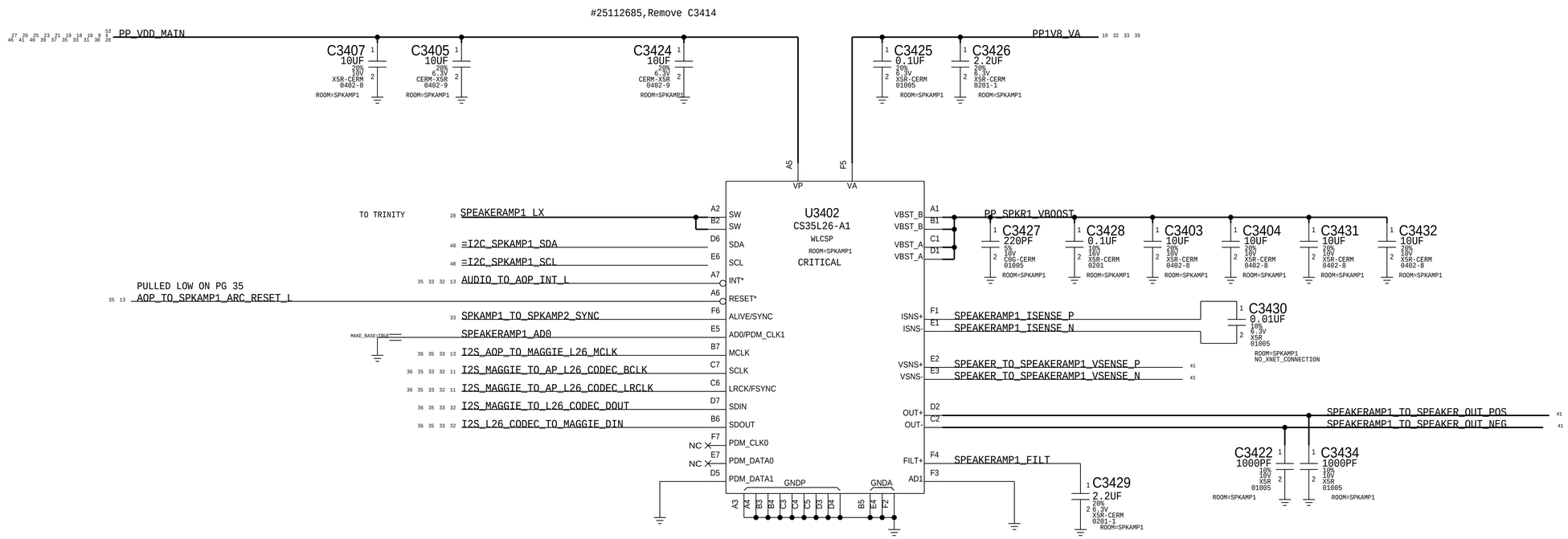

PAGE TITLE	AUDIO:SPEAKER AMP 1
Apple Inc.	DRAWING NUMBER 051-00542 SIZE D
	REVISION 5.0.0
	BRANCH
	PAGE 34 OF 53
	SHEET 34 OF 81

NOTICE OF PROPRIETARY PROPERTY:
THE INFORMATION CONTAINED HEREIN IS THE PROPRIETARY PROPERTY OF APPLE INC.
THE POSESSOR AGREES TO THE FOLLOWING:
I TO MAINTAIN THIS DOCUMENT IN CONFIDENCE
II NOT TO REPRODUCE OR COPY IT
III NOT TO REVEAL OR PUBLISH IT IN WHOLE OR PART
IV ALL RIGHTS RESERVED

ARC DRIVER

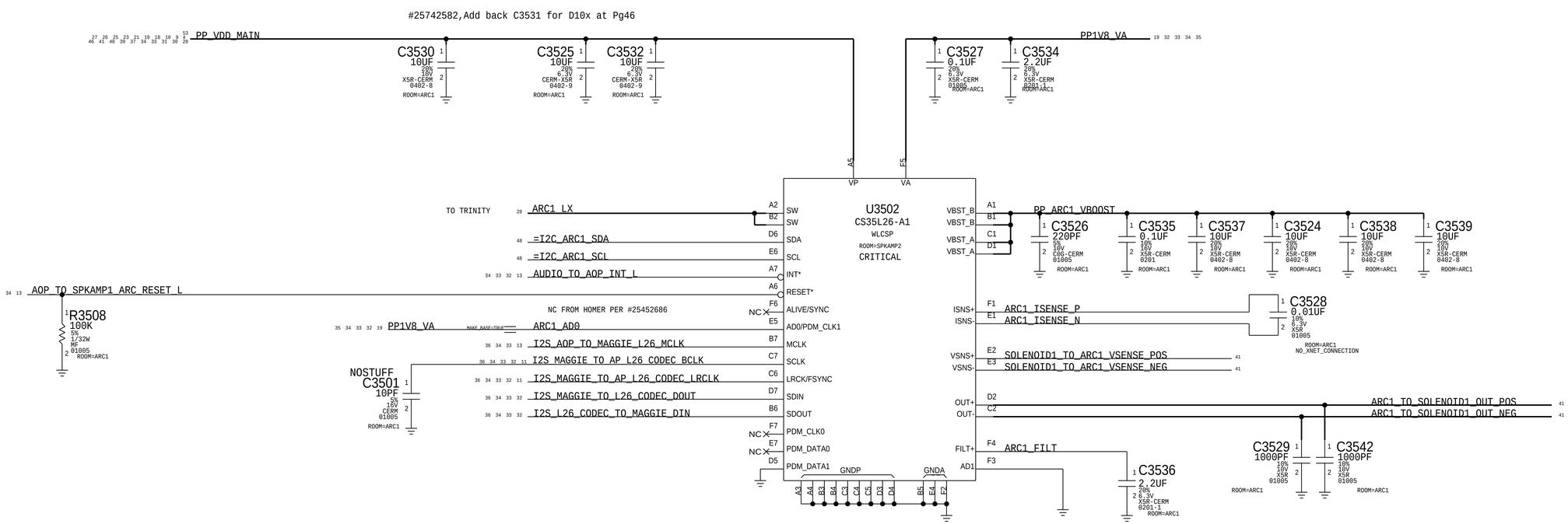

PAGE TITLE

ARC:DRIVER

Apple Inc.

DRAWING NUMBER 051-00542

SIZE D

REVISION 5.0.0

BRANCH

PAGE 35 OF 53

SHEET 35 OF 81

NOTICE OF PROPRIETARY PROPERTY:

THE INFORMATION CONTAINED HEREIN IS THE PROPRIETARY PROPERTY OF APPLE INC.
THE POSESSOR AGREES TO THE FOLLOWING:
I TO MAINTAIN THIS DOCUMENT IN CONFIDENCE
II NOT TO REPRODUCE OR COPY IT
III NOT TO REVEAL OR PUBLISH IT IN WHOLE OR PART
IV ALL RIGHTS RESERVED

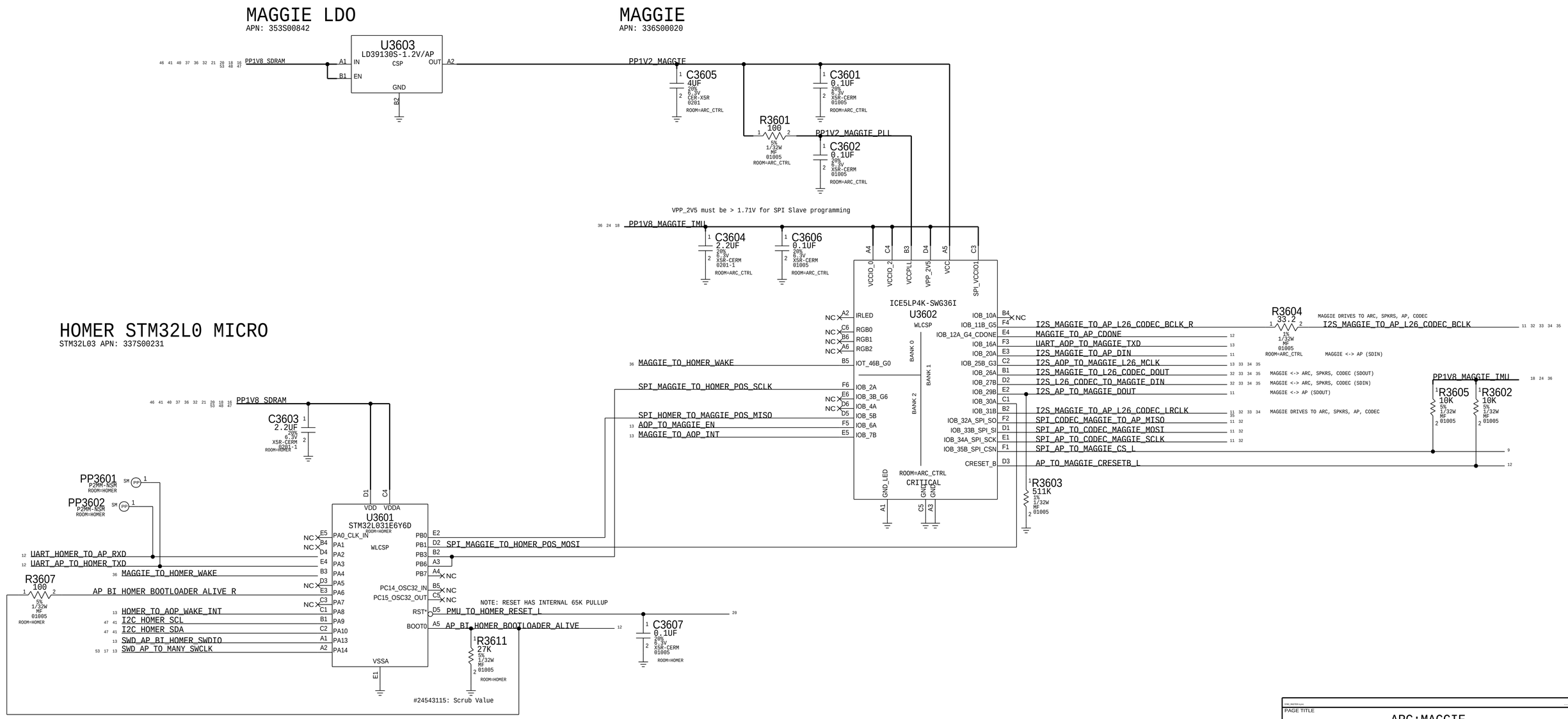

PAGE TITLE

ARC:MAGGIE

Apple Inc.

DRAWING NUMBER 051-00542

SIZE D

REVISION 5.0.0

BRANCH

PAGE 36 OF 53

SHEET 36 OF 81

NOTICE OF PROPRIETARY PROPERTY:

THE INFORMATION CONTAINED HEREIN IS THE PROPRIETARY PROPERTY OF APPLE INC.
THE POSESSOR AGREES TO THE FOLLOWING:
I TO MAINTAIN THIS DOCUMENT IN CONFIDENCE
II NOT TO REPRODUCE OR COPY IT
III NOT TO REVEAL OR PUBLISH IT IN WHOLE OR PART
IV ALL RIGHTS RESERVED

DISPLAY & TOUCH - POWER SUPPLIES

CHESTNUT DISPLAY PMU

APN:338S1172

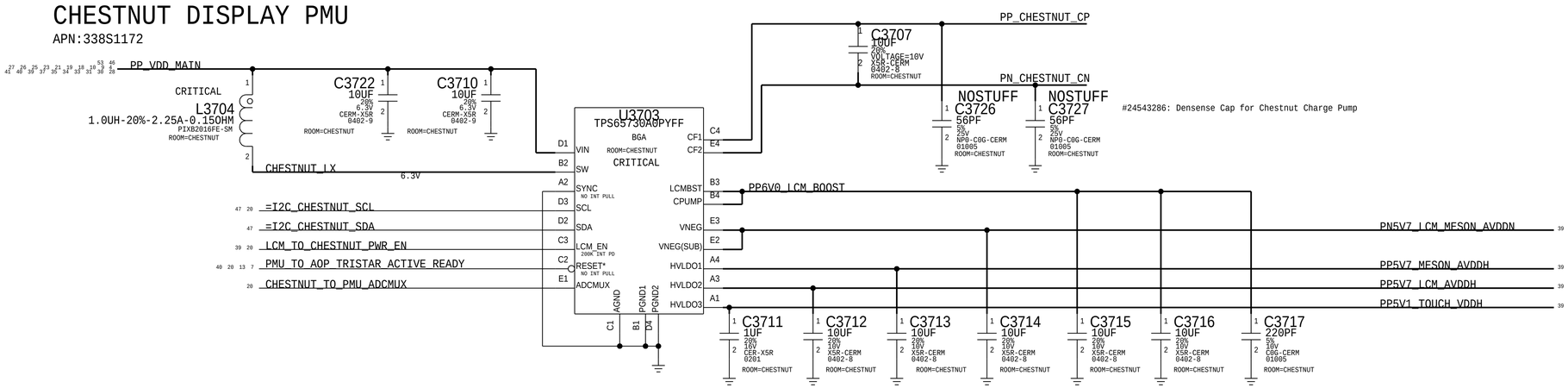

LED BACKLIGHT DRIVER - 6LED

APN:353s00640

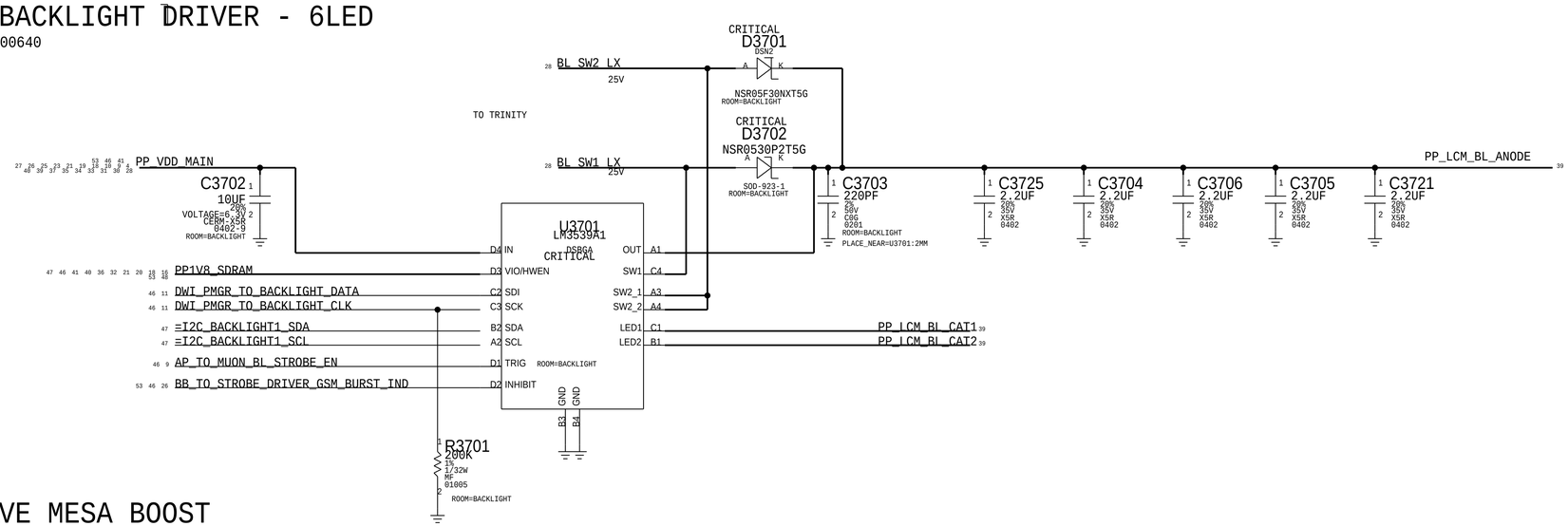

MOJAVE MESA BOOST

APN:353S00671

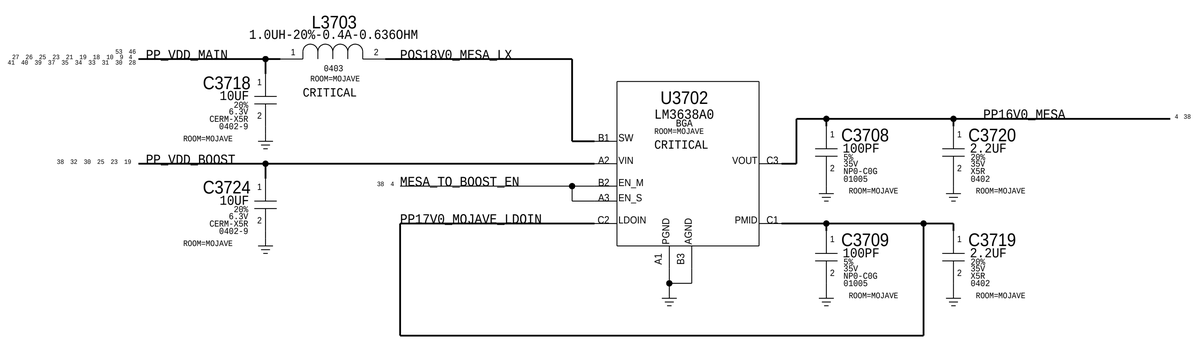

PAGE TITLE

DISPLAY & MESA:POWER

Apple Inc.

DRAWING NUMBER 051-00542 SIZE D

REVISION 5.0.0

BRANCH

PAGE 37 OF 53

SHEET 37 OF 81

NOTICE OF PROPRIETARY PROPERTY:

THE INFORMATION CONTAINED HEREIN IS THE PROPRIETARY PROPERTY OF APPLE INC.
THE POSESSOR AGREES TO THE FOLLOWING:
I TO MAINTAIN THIS DOCUMENT IN CONFIDENCE
II NOT TO REPRODUCE OR COPY IT
III NOT TO REVEAL OR PUBLISH IT IN WHOLE OR PART
IV ALL RIGHTS RESERVED

MESA POWER

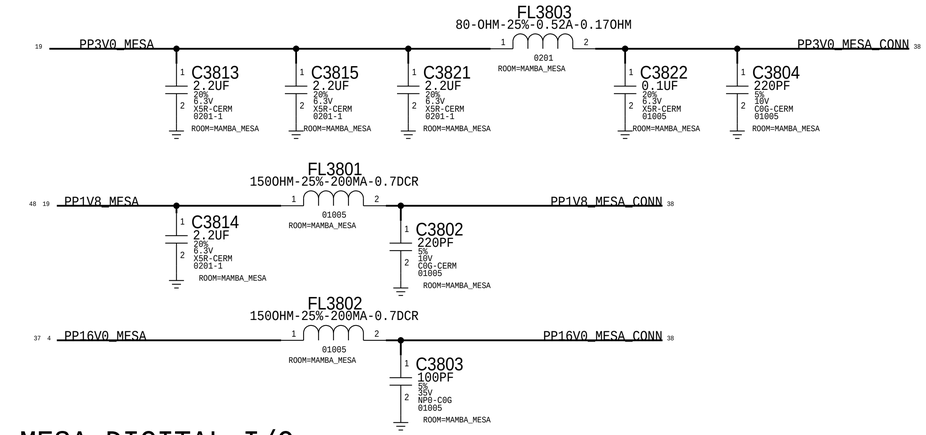

MESA DIGITAL I/O

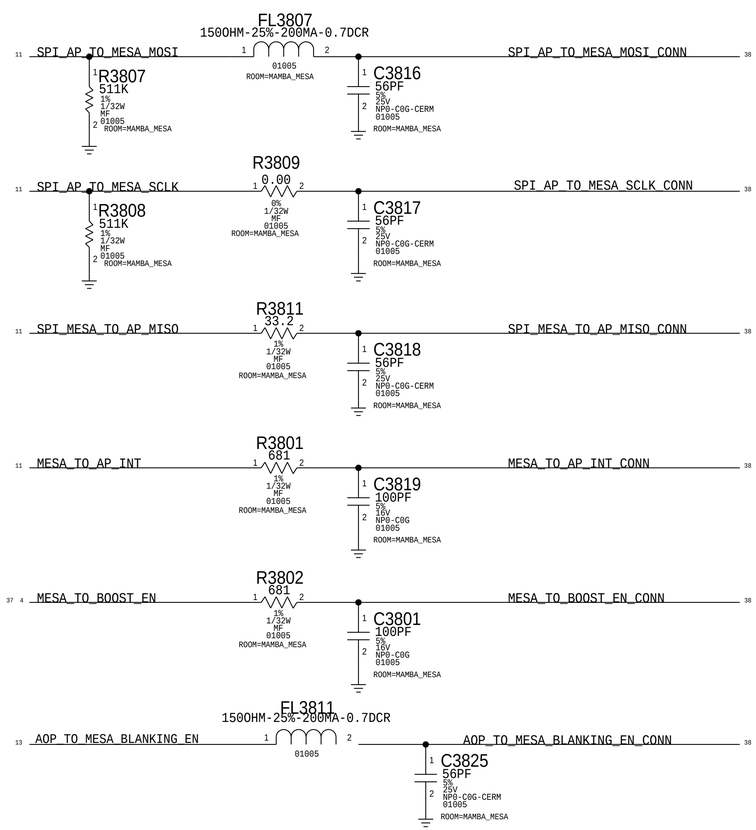

MAMBA AND MESA CONNECTOR

MLB: 516S00141 (RCPT)
FLEX: 516S00142 (PLUG)

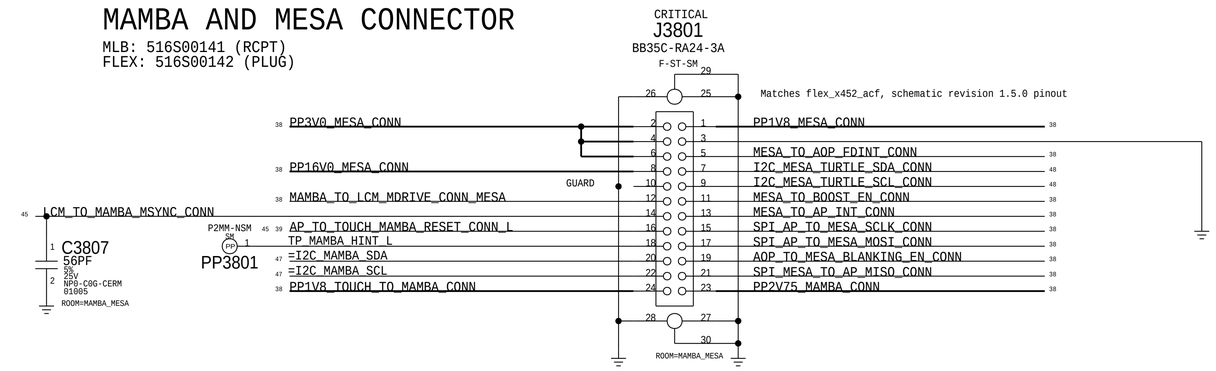

MAMBA POWER

NOTE: OUTPUT IMPDEANCE MUST BE >0.005-OHM
IN ORDER TO MEET CAP ESR REQUIREMENT PER LDO SPEC.
VENDOR ALSO RECOMMENDS CIN 2 COUT FOR STABILITY

TI:353S00576
ST:353S00932

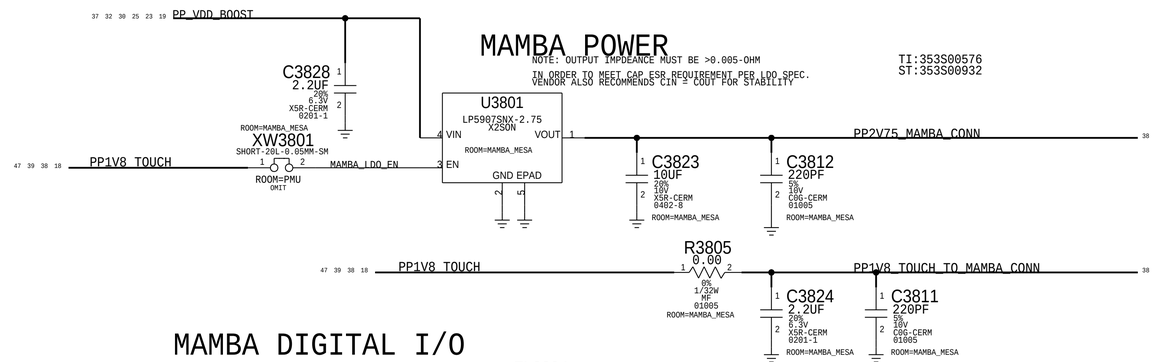

MAMBA DIGITAL I/O

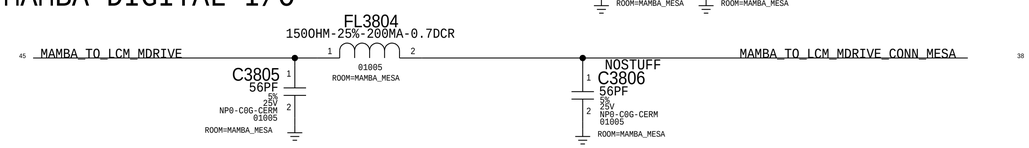

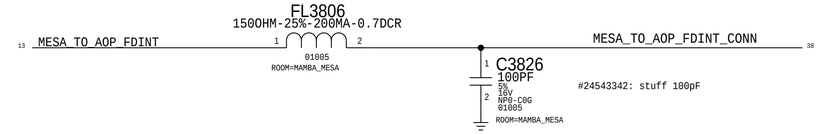

PAGE TITLE	B2B:ORB & MESA
Apple Inc.	DRAWING NUMBER 051-00542 · SIZE D
	REVISION 5.0.0
NOTICE OF PROPRIETARY PROPERTY: THE INFORMATION CONTAINED HEREIN IS THE PROPRIETARY PROPERTY OF APPLE INC. THE POSESSOR AGREES TO THE FOLLOWING: I TO MAINTAIN THIS DOCUMENT IN CONFIDENCE II NOT TO REPRODUCE OR COPY IT III NOT TO REVEAL OR PUBLISH IT IN WHOLE OR PART IV ALL RIGHTS RESERVED	BRANCH
	PAGE 38 OF 53
	SHEET 38 OF 81

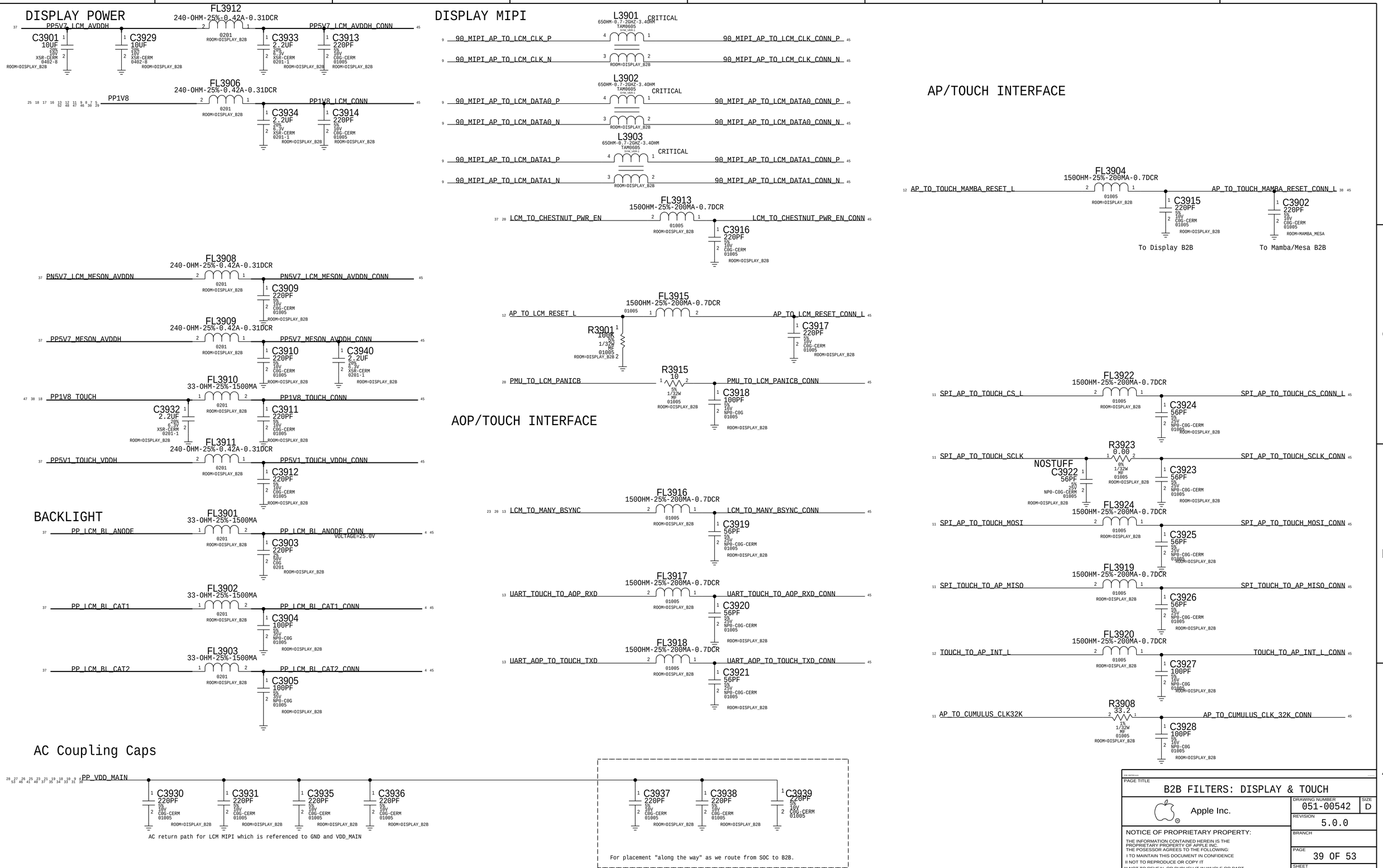
DISPLAY POWER
PP5V7_LCM_AVDDH
FL3912
240-OHM-25%-0.42A-0.31DCR
PP5V7_LCM_AVDDH_CONN
C3901 10UF 20% 10V X5R-CERM 0402-8 ROOM=DISPLAY_B2B
C3929 10UF 20% 10V X5R-CERM 0402-8 ROOM=DISPLAY_B2B
C3933 2.2UF 20% 6.3V X5R-CERM 0201-1 ROOM=DISPLAY_B2B
C3913 220PF 5% 10V C0G-CERM 01005 ROOM=DISPLAY_B2B
FL3906
240-OHM-25%-0.42A-0.31DCR
PP1V8
PP1V8_LCM_CONN
C3934 2.2UF 20% 6.3V X5R-CERM 0201-1 ROOM=DISPLAY_B2B
C3914 220PF 5% 10V C0G-CERM 01005 ROOM=DISPLAY_B2B
FL3908
240-OHM-25%-0.42A-0.31DCR
PN5V7_LCM_MESON_AVDDN
PN5V7_LCM_MESON_AVDDN_CONN
C3909 220PF 5% 10V C0G-CERM 01005 ROOM=DISPLAY_B2B
FL3909
240-OHM-25%-0.42A-0.31DCR
PP5V7_MESON_AVDDH
PP5V7_MESON_AVDDH_CONN
C3910 220PF 5% 10V C0G-CERM 01005 ROOM=DISPLAY_B2B
C3940 2.2UF 20% 6.3V X5R-CERM 0201-1 ROOM=DISPLAY_B2B
FL3910
33-OHM-25%-1500MA
PP1V8_TOUCH
PP1V8_TOUCH_CONN
C3932 2.2UF 20% 6.3V X5R-CERM 0201-1 ROOM=DISPLAY_B2B
C3911 220PF 5% 10V C0G-CERM 01005 ROOM=DISPLAY_B2B
FL3911
240-OHM-25%-0.42A-0.31DCR
PP5V1_TOUCH_VDDH
PP5V1_TOUCH_VDDH_CONN
C3912 220PF 5% 10V C0G-CERM 01005 ROOM=DISPLAY_B2B
BACKLIGHT
FL3901
33-OHM-25%-1500MA
PP_LCM_BL_ANODE
PP_LCM_BL_ANODE_CONN
VOLTAGE=25.0V
C3903 220PF 2% 50V C0G 0201 ROOM=DISPLAY_B2B
FL3902
33-OHM-25%-1500MA
PP_LCM_BL_CAT1
PP_LCM_BL_CAT1_CONN
C3904 100PF 5% 35V NP0-C0G 01005 ROOM=DISPLAY_B2B
FL3903
33-OHM-25%-1500MA
PP_LCM_BL_CAT2
PP_LCM_BL_CAT2_CONN
C3905 100PF 5% 35V NP0-C0G 01005 ROOM=DISPLAY_B2B
AC Coupling Caps
PP_VDD_MAIN
C3930 220PF 5% 10V C0G-CERM 01005 ROOM=DISPLAY_B2B
C3931 220PF 5% 10V C0G-CERM 01005 ROOM=DISPLAY_B2B
C3935 220PF 5% 10V C0G-CERM 01005 ROOM=DISPLAY_B2B
C3936 220PF 5% 10V C0G-CERM 01005 ROOM=DISPLAY_B2B
AC return path for LCM MIPI which is referenced to GND and VDD_MAIN
C3937 220PF 5% 10V C0G-CERM 01005 ROOM=DISPLAY_B2B
C3938 220PF 5% 10V C0G-CERM 01005 ROOM=DISPLAY_B2B
C3939 220PF 5% 10V C0G-CERM 01005
For placement "along the way" as we route from SOC to B2B.
DISPLAY MIPI
L3901 CRITICAL
650HM-0.7-2GHZ-3.40HM TAM0605
90_MIPI_AP_TO_LCM_CLK_P
90_MIPI_AP_TO_LCM_CLK_CONN_P
90_MIPI_AP_TO_LCM_CLK_N
90_MIPI_AP_TO_LCM_CLK_CONN_N
L3902 CRITICAL
650HM-0.7-2GHZ-3.40HM TAM0605
90_MIPI_AP_TO_LCM_DATA0_P
90_MIPI_AP_TO_LCM_DATA0_CONN_P
90_MIPI_AP_TO_LCM_DATA0_N
90_MIPI_AP_TO_LCM_DATA0_CONN_N
L3903 CRITICAL
650HM-0.7-2GHZ-3.4OHM TAM0605
90_MIPI_AP_TO_LCM_DATA1_P
90_MIPI_AP_TO_LCM_DATA1_CONN_P
90_MIPI_AP_TO_LCM_DATA1_N
90_MIPI_AP_TO_LCM_DATA1_CONN_N
FL3913
150OHM-25%-200MA-0.7DCR
LCM_TO_CHESTNUT_PWR_EN
LCM_TO_CHESTNUT_PWR_EN_CONN
C3916 220PF 5% 10V C0G-CERM 01005 ROOM=DISPLAY_B2B
FL3915
150OHM-25%-200MA-0.7DCR
AP_TO_LCM_RESET_L
AP_TO_LCM_RESET_CONN_L
R3901 100K 5% 1/32W MF 01005 ROOM=DISPLAY_B2B
C3917 220PF 5% 10V C0G-CERM 01005 ROOM=DISPLAY_B2B
R3915 10 5% 1/32W MF 01005 ROOM=DISPLAY_B2B
PMU_TO_LCM_PANICB
PMU_TO_LCM_PANICB_CONN
C3918 100PF 5% 10V NP0-C0G 01005 ROOM=DISPLAY_B2B
AOP/TOUCH INTERFACE
FL3916
150OHM-25%-200MA-0.7DCR
LCM_TO_MANY_BSYNC
LCM_TO_MANY_BSYNC_CONN
C3919 56PF 5% 25V NP0-C0G-CERM 01005 ROOM=DISPLAY_B2B
FL3917
150OHM-25%-200MA-0.7DCR
UART_TOUCH_TO_AOP_RXD
UART_TOUCH_TO_AOP_RXD_CONN
C3920 56PF 5% 25V NP0-C0G-CERM 01005 ROOM=DISPLAY_B2B
FL3918
150OHM-25%-200MA-0.7DCR
UART_AOP_TO_TOUCH_TXD
UART_AOP_TO_TOUCH_TXD_CONN
C3921 56PF 5% 25V NP0-C0G-CERM 01005 ROOM=DISPLAY_B2B
AP/TOUCH INTERFACE
FL3904
150OHM-25%-200MA-0.7DCR
AP_TO_TOUCH_MAMBA_RESET_L
AP_TO_TOUCH_MAMBA_RESET_CONN_L
C3915 220PF 5% 10V C0G-CERM 01005 ROOM=DISPLAY_B2B
C3902 220PF 5% 10V C0G-CERM 01005 ROOM=MAMBA_MESA
To Display B2B
To Mamba/Mesa B2B
FL3922
150OHM-25%-200MA-0.7DCR
SPI_AP_TO_TOUCH_CS_L
SPI_AP_TO_TOUCH_CS_CONN_L
C3924 56PF 5% 25V NP0-C0G-CERM 01005 ROOM=DISPLAY_B2B
R3923 0.00 0% 1/32W MF 01005 ROOM=DISPLAY_B2B
SPI_AP_TO_TOUCH_SCLK
SPI_AP_TO_TOUCH_SCLK_CONN
NOSTUFF
C3922 56PF 5% 25V NP0-C0G-CERM 01005 ROOM=DISPLAY_B2B
C3923 56PF 5% 25V NP0-C0G-CERM 01005 ROOM=DISPLAY_B2B
FL3924
150OHM-25%-200MA-0.7DCR
SPI_AP_TO_TOUCH_MOSI
SPI_AP_TO_TOUCH_MOSI_CONN
C3925 56PF 5% 25V NP0-C0G-CERM 01005 ROOM=DISPLAY_B2B
FL3919
150OHM-25%-200MA-0.7DCR
SPI_TOUCH_TO_AP_MISO
SPI_TOUCH_TO_AP_MISO_CONN
C3926 56PF 5% 25V NP0-C0G-CERM 01005 ROOM=DISPLAY_B2B
FL3920
150OHM-25%-200MA-0.7DCR
TOUCH_TO_AP_INT_L
TOUCH_TO_AP_INT_L_CONN
C3927 100PF 5% 16V NP0-C0G 01005 ROOM=DISPLAY_B2B
R3908 33.2 1% 1/32W MF 01005 ROOM=DISPLAY_B2B
AP_TO_CUMULUS_CLK32K
AP_TO_CUMULUS_CLK_32K_CONN
C3928 100PF 5% 16V NP0-C0G 01005 ROOM=DISPLAY_B2B
PAGE TITLE
B2B FILTERS: DISPLAY & TOUCH
Apple Inc.
DRAWING NUMBER 051-00542
SIZE D
REVISION 5.0.0
BRANCH
PAGE 39 OF 53
SHEET 39 OF 81
NOTICE OF PROPRIETARY PROPERTY:
THE INFORMATION CONTAINED HEREIN IS THE PROPRIETARY PROPERTY OF APPLE INC.
THE POSESSOR AGREES TO THE FOLLOWING:
I TO MAINTAIN THIS DOCUMENT IN CONFIDENCE
II NOT TO REPRODUCE OR COPY IT
III NOT TO REVEAL OR PUBLISH IT IN WHOLE OR PART
IV ALL RIGHTS RESERVED

TRISTAR 2

z=0.45mm

<rdar:/24285280> EVT: 343S00091 (P2:343S00078)

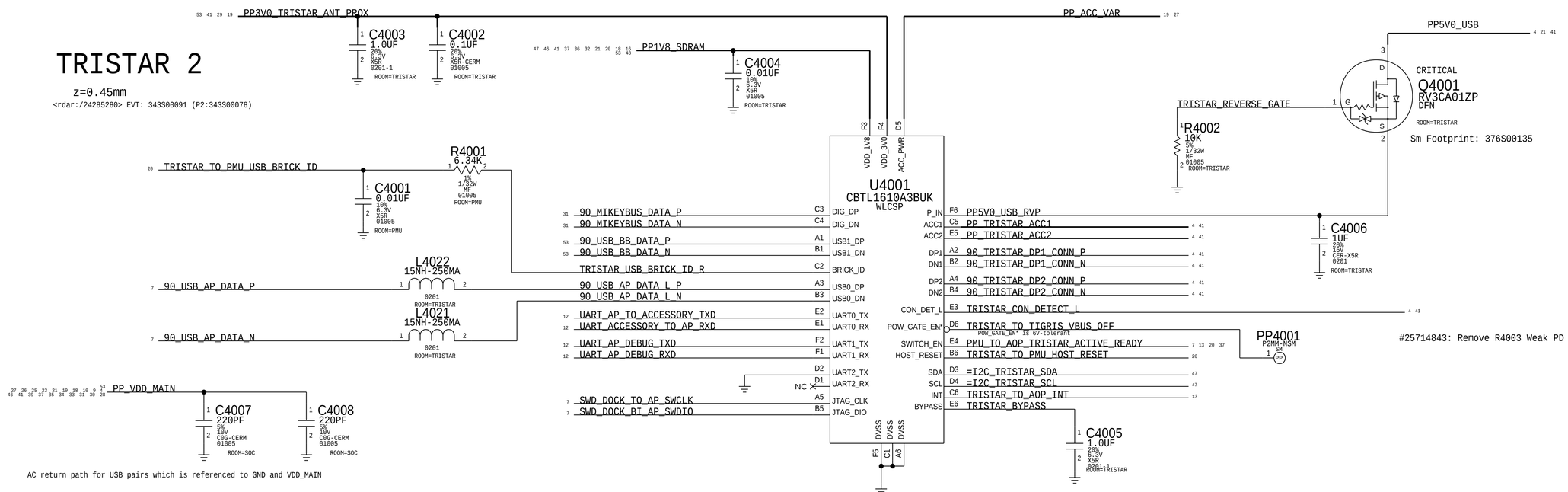

AC return path for USB pairs which is referenced to GND and VDD_MAIN

#25714843: Remove R4003 Weak PD

PAGE TITLE	TRISTAR 2
Apple Inc.	DRAWING NUMBER 051-00542 SIZE D
	REVISION 5.0.0
	BRANCH
	PAGE 40 OF 53
	SHEET 40 OF 81

NOTICE OF PROPRIETARY PROPERTY:
THE INFORMATION CONTAINED HEREIN IS THE PROPRIETARY PROPERTY OF APPLE INC.
THE POSESSOR AGREES TO THE FOLLOWING:
I TO MAINTAIN THIS DOCUMENT IN CONFIDENCE
II NOT TO REPRODUCE OR COPY IT
III NOT TO REVEAL OR PUBLISH IT IN WHOLE OR PART
IV ALL RIGHTS RESERVED

ANTENNA

Please loop in Matt Mow (Antenna Team)
when changing these components!

FL4103
150OHM-25%-200MA-0.7DCR
01005
ROOM=DOCK_B2B
PP3V0_LAT_CONN
C4134 220PF 5% 10V C0G-CERM 01005 ROOM=DOCK_B2B

53 40 29 19 PP3V0_TRISTAR_ANT_PROX
FL4107
150OHM-25%-200MA-0.7DCR
01005
ROOM=DOCK_B2B
PP3V0_LAT1_CONN
VOLTAGE=3.0V
C4119 220PF 5% 10V C0G-CERM 01005 ROOM=DOCK_B2B

PP1V8_SDRAM
FL4108
150OHM-25%-200MA-0.7DCR
01005
ROOM=DOCK_B2B
PP1V8_LAT_ARC_CONN
C4120 220PF 5% 10V C0G-CERM 01005 ROOM=DOCK_B2B

53 BB_TO_LAT_ANT_SCLK
R4109 0.00 8% 1/32W MF 01005 ROOM=DOCK_B2B
BB_TO_LAT_ANT_SCLK_CONN
C4121 33PF 5% 16V NP0-C0G-CERM 01005 ROOM=DOCK_B2B

53 BB_TO_LAT_ANT_DATA
R4110 0.00 8% 1/32W MF 01005 ROOM=DOCK_B2B
BB_TO_LAT_ANT_DATA_CONN
C4122 33PF 5% 16V NP0-C0G-CERM 01005 ROOM=DOCK_B2B

ARC CONTROL

47 36 I2C_HOMER_SCL
FL4104 49.9 1% 1/32W MF 01005 ROOM=DOCK_B2B
I2C_HOMER_SCL_CONN
CKPLUS_WAIVE=I2C_PULLUP
C4135 56PF 5% 25V NP0-C0G-CERM 01005 ROOM=DOCK_B2B

47 36 I2C_HOMER_SDA
FL4112
1500HM-25%-0.21A-0.69OHM
01005
I2C_HOMER_SDA_CONN
CKPLUS_WAIVE=I2C_PULLUP
C4136 56PF 5% 25V NP0-C0G-CERM 01005 ROOM=DOCK_B2B

ARC1

41 35 ARC1_TO_SOLENOID1_OUT_POS
41 35 ARC1_TO_SOLENOID1_OUT_NEG
C4101 220PF 5% 10V C0G-CERM 01005 ROOM=DOCK_B2B
C4102 220PF 5% 10V C0G-CERM 01005 ROOM=DOCK_B2B

Antenna GPIO

53 BB_TO_LAT_GPO1
FL4101
1500HM-25%-200MA-0.7DCR
01005
ROOM=DOCK_B2B
BB_TO_LAT_GPO1_CONN
C4110 56PF 5% 25V NP0-C0G-CERM 01005 ROOM=DOCK_B2B

53 BB_TO_LAT_GPO2
FL4102
1500HM-25%-200MA-0.7DCR
01005
ROOM=DOCK_B2B
BB_TO_LAT_GPO2_CONN
C4111 56PF 5% 25V NP0-C0G-CERM 01005 ROOM=DOCK_B2B

Per ANT Erdinc, change to cap

LOWER MIC1/4

31 LOWERMIC1_TO_CODEC_AIN1_P
FL4116
1500HM-25%-200MA-0.7DCR
01005
ROOM=DOCK_B2B
LOWERMIC1_TO_CODEC_AIN1_CONN_POS
C4128 56PF 5% 25V NP0-C0G-CERM 01005 ROOM=DOCK_B2B

31 LOWERMIC1_TO_CODEC_AIN1_N
FL4117
1500HM-25%-200MA-0.7DCR
01005
ROOM=DOCK_B2B
LOWERMIC1_TO_CODEC_AIN1_CONN_NEG
C4129 56PF 5% 25V NP0-C0G-CERM 01005 ROOM=DOCK_B2B

32 PP_CODEC_TO_LOWERMIC1_BIAS
FL4118
1500HM-25%-200MA-0.7DCR
01005
ROOM=DOCK_B2B
PP_CODEC_TO_LOWERMIC1_BIAS_CONN
C4130 220PF 5% 10V C0G-CERM 01005 ROOM=DOCK_B2B

31 LOWERMIC4_TO_CODEC_AIN2_P
FL4119
1500HM-25%-200MA-0.7DCR
01005
ROOM=DOCK_B2B
LOWERMIC4_TO_CODEC_AIN2_CONN_POS
C4131 56PF 5% 25V NP0-C0G-CERM 01005 ROOM=DOCK_B2B

31 LOWERMIC4_TO_CODEC_AIN2_N
FL4120
1500HM-25%-200MA-0.7DCR
01005
ROOM=DOCK_B2B
LOWERMIC4_TO_CODEC_AIN2_CONN_NEG
C4132 56PF 5% 25V NP0-C0G-CERM 01005 ROOM=DOCK_B2B

32 PP_CODEC_TO_LOWERMIC4_BIAS
FL4121
1500HM-25%-200MA-0.7DCR
01005
ROOM=DOCK_B2B
PP_CODEC_TO_LOWERMIC4_BIAS_CONN
C4133 220PF 5% 10V C0G-CERM 01005 ROOM=DOCK_B2B

SPEAKER1

34 SPEAKER_TO_SPEAKERAMP1_VSENSE_P
FL4114
1500HM-25%-200MA-0.7DCR
01005
ROOM=DOCK_B2B
SPEAKER_TO_SPEAKERAMP1_VSENSE_CONN_POS
C4126 220PF 5% 10V C0G-CERM 01005 ROOM=DOCK_B2B

34 SPEAKER_TO_SPEAKERAMP1_VSENSE_N
FL4115
1500HM-25%-200MA-0.7DCR
01005
ROOM=DOCK_B2B
SPEAKER_TO_SPEAKERAMP1_VSENSE_CONN_NEG
C4127 220PF 5% 10V C0G-CERM 01005 ROOM=DOCK_B2B

41 34 SPEAKERAMP1_TO_SPEAKER_OUT_POS
C4103 220PF 5% 10V C0G-CERM 01005 ROOM=DOCK_B2B

41 34 SPEAKERAMP1_TO_SPEAKER_OUT_NEG
C4104 220PF 5% 10V C0G-CERM 01005 ROOM=DOCK_B2B

VOLTAGE=16.0V

40 21 4 PP5V0_USB
C4109 0.1UF 10% 25V X5R 0201 ROOM=DOCK_B2B
C4105 0.1UF 10% 25V X5R 0201 ROOM=DOCK_B2B
C4106 0.1UF 10% 25V X5R 0201 ROOM=DOCK_B2B
C4107 100PF 5% 25V NP0-C0G 01005 ROOM=DOCK_B2B
C4108 56PF 5% 25V NP0-C0G-CERM 01005 ROOM=DOCK_B2B
J4101 245857 F-ST-SM

#25429221:Carrier Dock flex to add +1 ACC2 pin

Pin	Signal	Pin	Signal
1	41 34 SPEAKERAMP1_TO_SPEAKER_OUT_NEG	2	
3	41 SPEAKER_TO_SPEAKERAMP1_VSENSE_CONN_NEG	4	
5	46 BB_TO_LAT_GPO3_CONN	6	PP_TRISTAR_ACC2_CONN 41
7	41 LOWERMIC4_TO_CODEC_AIN2_CONN_NEG	8	BB_TO_LAT_GPO2_CONN 41
9	41 PP_CODEC_TO_LOWERMIC4_BIAS_CONN	10	LOWERMIC4_TO_CODEC_AIN2_CONN_POS 41
11	41 PP_TRISTAR_ACC1_CONN	12	LOWERMIC4_TO_CODEC_BIAS_FILT_RET 32
13	#22499940:Change Net Name to POS/NEG	14	BB_TO_LAT_GPO1_CONN 41
15	40 4 90_TRISTAR_DP2_CONN_P	16	BB_TO_LAT_ANT_SCLK_CONN 41
17	40 4 90_TRISTAR_DP2_CONN_N	18	BB_TO_LAT_ANT_DATA_CONN 41
19		20	PP1V8_LAT_ARC_CONN 41
21	40 4 90_TRISTAR_DP1_CONN_N	22	PP3V0_LAT1_CONN 41
23	40 4 90_TRISTAR_DP1_CONN_P	24	
25		26	
27	31 MIKEYBUS_REFERENCE	28	
29	41 LOWERMIC1_TO_CODEC_AIN1_CONN_POS	30	LOWERMIC1_TO_CODEC_AIN1_CONN_NEG 41
31	32 LOWERMIC1_TO_CODEC_BIAS_FILT_RET	32	PP_CODEC_TO_LOWERMIC1_BIAS_CONN 41
33		34	TRISTAR_CON_DETECT_CONN_L 41
35	47 I2C_MIC1_SDA_CONN	36	
37	47 I2C_MIC1_SCL_CONN	38	
39		40	ARC1_TO_SOLENOID1_OUT_NEG 35 41
41	41 35 ARC1_TO_SOLENOID1_OUT_POS	42	ARC1_TO_SOLENOID1_OUT_POS 35 41
43	35 SOLENOID1_TO_ARC1_VSENSE_POS	44	SOLENOID1_TO_ARC1_VSENSE_NEG 35
45	41 PP3V0_LAT_CONN	46	I2C_HOMER_SDA_CONN 41
47	41 SPEAKER_TO_SPEAKERAMP1_VSENSE_CONN_POS	48	I2C_HOMER_SCL_CONN 41
51	41 34 SPEAKERAMP1_TO_SPEAKER_OUT_POS	52	
54			

DOCK FLEX CONNECTOR

TRISTAR

40 4 TRISTAR_CON_DETECT_L
R4102 1.00K 5% 1/32W MF 01005 ROOM=DOCK_B2B
TRISTAR_CON_DETECT_CONN_L 41
C4116 27PF 5% 16V NP0-C0G 01005 ROOM=DOCK_B2B

40 4 PP_TRISTAR_ACC1
FL4105
10-0HM-1.1A
01005
ROOM=DOCK_B2B
PP_TRISTAR_ACC1_CONN 41
VOLTAGE=4.3V
C4117 100PF 5% 16V NP0-C0G 01005 ROOM=DOCK_B2B

40 4 PP_TRISTAR_ACC2
FL4106
22-0HM-25%-1800MA
0201
ROOM=DOCK_B2B
#25098110: Decrease DCR
PP_TRISTAR_ACC2_CONN 41
VOLTAGE=4.3V
C4118 100PF 5% 16V NP0-C0G 01005 ROOM=DOCK_B2B

USB AC Coupling

AC return path for USB pairs which is referenced to GND and VDD_MAIN

27 26 25 23 21 19 18 10 3 4 53
46 40 39 37 35 34 33 31 30 29
PP_VDD_MAIN
C4143 220PF 5% 10V C0G-CERM 01005 ROOM=DOCK

PAGE TITLE	B2B:DOCK FLEX
Apple Inc.	DRAWING NUMBER 051-00542 SIZE D
	REVISION 5.0.0
NOTICE OF PROPRIETARY PROPERTY: THE INFORMATION CONTAINED HEREIN IS THE PROPRIETARY PROPERTY OF APPLE INC. THE POSESSOR AGREES TO THE FOLLOWING: I TO MAINTAIN THIS DOCUMENT IN CONFIDENCE II NOT TO REPRODUCE OR COPY IT III NOT TO REVEAL OR PUBLISH IT IN WHOLE OR PART IV ALL RIGHTS RESERVED	BRANCH
	PAGE 41 OF 53
	SHEET 41 OF 81

PAGE TITLE

spare

Apple Inc.

DRAWING NUMBER	051-00542
SIZE	D
REVISION	5.0.0
BRANCH	
PAGE	42 OF 53
SHEET	42 OF 81

NOTICE OF PROPRIETARY PROPERTY:

THE INFORMATION CONTAINED HEREIN IS THE PROPRIETARY PROPERTY OF APPLE INC.
THE POSESSOR AGREES TO THE FOLLOWING:

I TO MAINTAIN THIS DOCUMENT IN CONFIDENCE

II NOT TO REPRODUCE OR COPY IT

III NOT TO REVEAL OR PUBLISH IT IN WHOLE OR PART

IV ALL RIGHTS RESERVED

PAGE TITLE

spare

Apple Inc.

DRAWING NUMBER	051-00542
SIZE	D
REVISION	5.0.0
BRANCH	
PAGE	43 OF 53
SHEET	43 OF 81

NOTICE OF PROPRIETARY PROPERTY:

THE INFORMATION CONTAINED HEREIN IS THE PROPRIETARY PROPERTY OF APPLE INC.
THE POSESSOR AGREES TO THE FOLLOWING:

I TO MAINTAIN THIS DOCUMENT IN CONFIDENCE

II NOT TO REPRODUCE OR COPY IT

III NOT TO REVEAL OR PUBLISH IT IN WHOLE OR PART

IV ALL RIGHTS RESERVED

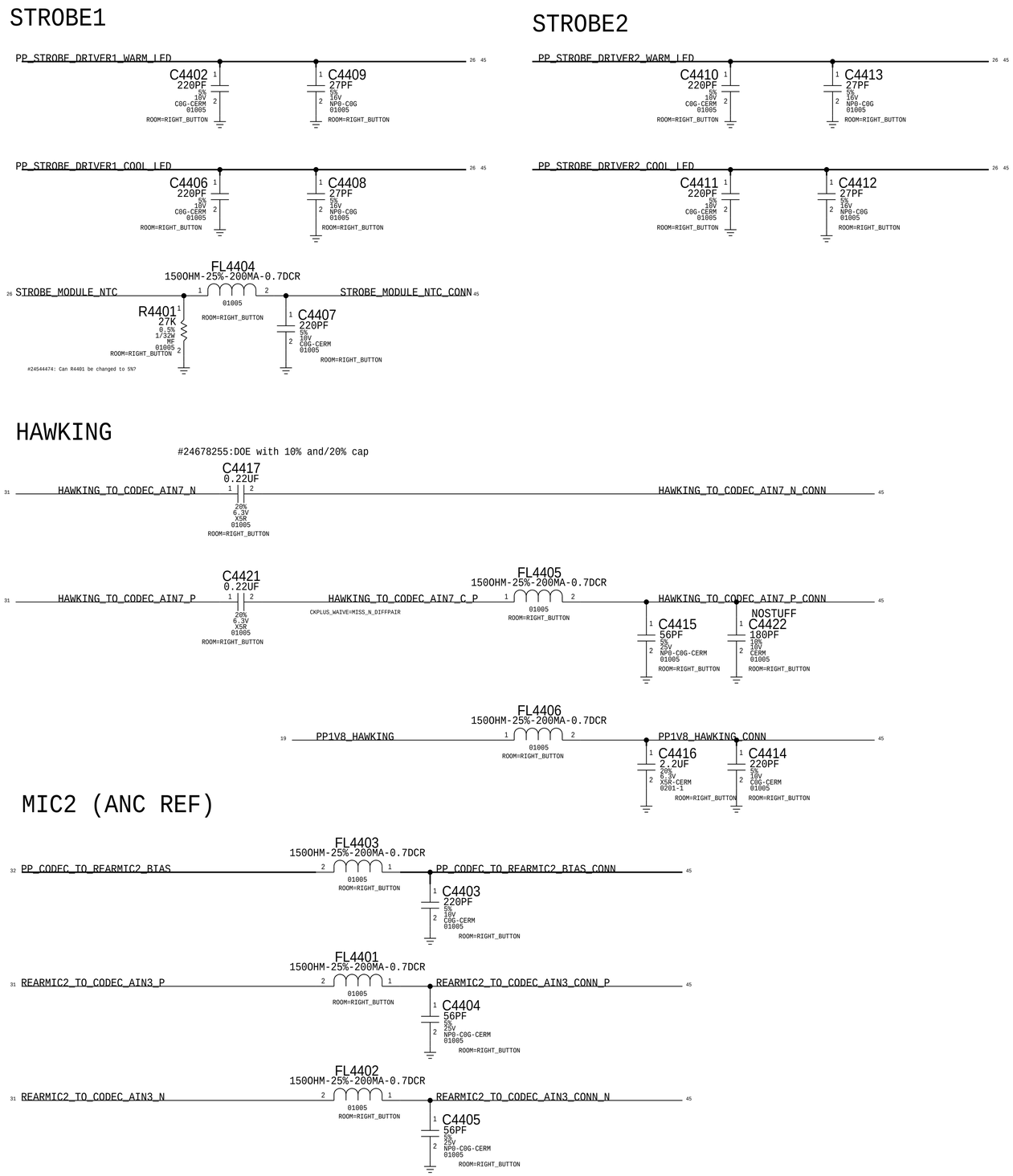

PAGE TITLE

B2B FILTERS: RIGHT BUTTON FLEX

Apple Inc.

DRAWING NUMBER 051-00542 SIZE D

REVISION 5.0.0

BRANCH

PAGE 44 OF 53

SHEET 44 OF 81

NOTICE OF PROPRIETARY PROPERTY:

THE INFORMATION CONTAINED HEREIN IS THE PROPRIETARY PROPERTY OF APPLE INC.
THE POSESSOR AGREES TO THE FOLLOWING:
I TO MAINTAIN THIS DOCUMENT IN CONFIDENCE
II NOT TO REPRODUCE OR COPY IT
III NOT TO REVEAL OR PUBLISH IT IN WHOLE OR PART
IV ALL RIGHTS RESERVED

UTAH-D FLEX CONNECTOR

516S00152 RCPT (USED ON MLB) <-- THIS ONE
516S00151 PLUG

J4501
AA26D-S022VA1
F-ST-SM
ROOM=RCAM_B2B

Pin	Signal	Pin	Signal
25 PP3V0_UT_SVDD_CONN	2	1	90_LPDP_UT_TO_AP_D2_CONN_N 25
25 LPDP_UT_BI_AP_AUX_CONN	4	3	90_LPDP_UT_TO_AP_D2_CONN_P 25
25 AP_TO_UT_SHUTDOWN_CONN_L	6	5	
30 25 UT_AND_NV_TO_LED_DRIVER_STROBE_EN_CONN	8	7	90_LPDP_UT_TO_AP_D3_CONN_N 25
39 UT_TO_NV_SYNC_J2501_CONN	10	9	90_LPDP_UT_TO_AP_D3_CONN_P 25
25 PP1V8_UT_CONN	12	11	
48 I2C_UT_SDA_CONN	14	13	AP_TO_UT_CLK_CONN 25
48 I2C_UT_SCL_CONN	16	15	
	18	17	PP2V9_UT_AVDD_CONN 25 46
25 PP2V8_UT_AF_VAR_CONN	20	19	
	22	21	
25 PP1V2_UT_VDD_CONN	26	25	

DISPLAY / TOUCH FLEX CONNECTOR

MLB: 516S00050

J4502
BB35C-RA48-3A
F-ST-SM

R4501
49.9
1%
1/32W
MF
01005
ROOM=DISPLAY_B2B

47 =I2C_TOUCH_SCL

C4507
56PF
5%
25V
NP0-C0G-CERM
01005
ROOM=DISPLAY_B2B

PP4501
P2MM-NSM
SM
PP

Pin	Signal	Pin	Signal
38 MAMBA_TO_LCM_MDRIVE	1	2	I2C_DISP_EEPROM_SCL_CONN 47 CKPLUS_WAIVE=I2C_PULLUP
47 I2C_DISP_EEPROM_SDA_CONN CKPLUS_WAIVE=I2C_PULLUP	3	4	=I2C_TOUCH_SDA 47
	5	6	SPI_AP_TO_TOUCH_MOSI_CONN 39
39 SPI_TOUCH_TO_AP_MISO_CONN	7	8	TOUCH_TO_AP_INT_L_CONN 39
39 SPI_AP_TO_TOUCH_CS_CONN_L	9	10	AP_TO_TOUCH_MAMBA_RESET_CONN_L 38 39
39 AP_TO_CUMULUS_CLK_32K_CONN	11	12	Per #25048465:No Satin flex support in CRB
39 SPI_AP_TO_TOUCH_SCLK_CONN	13	14	UART_AOP_TO_TOUCH_TXD_CONN 39
39 UART_TOUCH_TO_AOP_RXD_CONN	15	16	PMU_TO_LCM_PANICB_CONN 39
39 AP_TO_LCM_RESET_CONN_L	17	18	PP1V8_LCM_CONN 39
39 PP5V1_TOUCH_VDDH_CONN	19	20	PP5V7_LCM_AVDDH_CONN 39
39 PP1V8_TOUCH_CONN	21	22	LCM_TO_CHESTNUT_PWR_EN_CONN 39
39 PN5V7_LCM_MESON_AVDDN_CONN	23	24	LCM_TO_MANY_BSYNC_CONN 39
39 PP5V7_MESON_AVDDH_CONN	25	26	
38 LCM_TO_MAMBA_MSYNC_CONN	27	28	90_MIPI_AP_TO_LCM_DATA0_CONN_P 39
TP_LCM_PIFA	29	30	90_MIPI_AP_TO_LCM_DATA0_CONN_N 39
39 90_MIPI_AP_TO_LCM_CLK_CONN_P	31	32	
39 90_MIPI_AP_TO_LCM_CLK_CONN_N	33	34	90_MIPI_AP_TO_LCM_DATA1_CONN_P 39
	35	36	90_MIPI_AP_TO_LCM_DATA1_CONN_N 39
39 4 PP_LCM_BL_CAT1_CONN	37	38	
39 4 PP_LCM_BL_ANODE_CONN	39	40	90_MIPI_AP_TO_LCM_DATA2_CONN_P 46
39 4 PP_LCM_BL_CAT2_CONN	41	42	90_MIPI_AP_TO_LCM_DATA2_CONN_N 46
46 4 PP_LCM_BL34_CAT1_CONN	43	44	
46 4 PP_LCM_BL34_ANODE_CONN	45	46	90_MIPI_AP_TO_LCM_DATA3_CONN_P 46
46 4 PP_LCM_BL34_CAT2_CONN	47	48	90_MIPI_AP_TO_LCM_DATA3_CONN_N 46

FOREHEAD FLEX CONNECTOR

MLB: 516S00146 (MCO REV 27)

ROOM=FOREHEAD
CRITICAL
J4503
245858036201829
F-ST-SM

Pin	Signal	Pin	Signal
29 PP2V9_NH_AVDD_CONN	1	2	90_MIPI_NH_TO_AP_DATA0_P 9
29 PP1V8_NH_TO_CONN	3	4	90_MIPI_NH_TO_AP_DATA0_N 9
	5	6	
29 AP_TO_NH_SHUTDOWN_CONN_L	7	8	90_MIPI_NH_TO_AP_CLK_P 9
	9	10	90_MIPI_NH_TO_AP_CLK_N 9
29 AP_TO_NH_CLK_CONN	11	12	
	13	14	90_MIPI_NH_TO_AP_DATA1_P 9
48 I2C_NH_SCL_CONN	15	16	90_MIPI_NH_TO_AP_DATA1_N 9
47 I2C_ALS_CONVOY_SCL_CONN	17	18	
29 PDM_CONVOY_TO_ADARE_DATA_CONN	19	20	PP1V2_NH_DVDD_CONN 29
29 PP3V0_PROX_CONN	21	22	I2C_NH_SDA_CONN 48
29 SPEAKER_TO_SPEAKERAMP2_VSENSE_CONN_N	23	24	ALS_TO_AP_INT_CONN_L 29
46 33 29 SPEAKERAMP2_TO_SPEAKER_OUT_NEG	25	26	I2C_ALS_CONVOY_SDA_CONN 47
48 I2C_PROX_SDA_CONN	27	28	PDM_ADARE_TO_CONVOY_CLK_CONN 29
48 I2C_PROX_SCL_CONN	29	30	PP3V0_ALS_CONVOY_CONN 29
29 PROX_BI_AP_AOP_INT_PWM_L_CONN	31	32	SPEAKER_TO_SPEAKERAMP2_VSENSE_CONN_P 29
29 PP_CODEC_TO_FRONTMIC3_BIAS_CONN	33	34	SPEAKERAMP2_TO_SPEAKER_OUT_POS 29 33 46
29 FRONTMIC3_TO_CODEC_AIN4_CONN_P	35	36	FRONTMIC3_TO_CODEC_AIN4_CONN_N 29

COMBO BUTTON FLEX CONNECTOR

APPLE APN: 516S00150 <-- THIS ONE ON MLB (matched MCO rev 27)
APPLE APN: 516S00149

ROOM=RIGHT_BUTTON
J4504
AA37D-S014SVA1
F-ST-SM

XW4501
SHORT-20L-0.05MM-SM

Pin	Signal	Pin	Signal
MAKE_BASE=TRUE STROBE_LED_RETURN	20	19	
44 26 PP_STROBE_DRIVER2_COOL_LED	16	15	
44 STROBE_MODULE_NTC_CONN	2	1	PP_CODEC_TO_REARMIC2_BIAS_CONN 44
44 PP1V8_HAWKING_CONN	4	3	REARMIC2_TO_CODEC_AIN3_CONN_N 44
44 HAWKING_TO_CODEC_AIN7_P_CONN	6	5	REARMIC2_TO_CODEC_AIN3_CONN_P 44
44 HAWKING_TO_CODEC_AIN7_N_CONN	8	7	REARMIC2_TO_CODEC_BIAS_FILT_RET 32
44 BUTTON_RINGER_A_CONN	10	9	I2C_MIC2_SDA_CONN 47
44 BUTTON_VOL_UP_CONN_L	12	11	I2C_MIC2_SCL_CONN 47
44 BUTTON_VOL_DOWN_CONN_L	14	13	BUTTON_POWER_KEY_CONN_L 44
44 26 PP_STROBE_DRIVER2_WARM_LED	18	17	PP_STROBE_DRIVER1_COOL_LED 26 44
44 26 PP_STROBE_DRIVER1_WARM_LED	22	21	

CRITICAL

SYNC_MASTER=sync SYNC_DATE=04/28/2016

PAGE TITLE
B2B FF SPECIFIC

Apple Inc.

DRAWING NUMBER 051-00542
SIZE D
REVISION 5.0.0
BRANCH
PAGE 45 OF 53
SHEET 45 OF 81

NOTICE OF PROPRIETARY PROPERTY:
THE INFORMATION CONTAINED HEREIN IS THE PROPRIETARY PROPERTY OF APPLE INC.
THE POSESSOR AGREES TO THE FOLLOWING:
I TO MAINTAIN THIS DOCUMENT IN CONFIDENCE
II NOT TO REPRODUCE OR COPY IT
III NOT TO REVEAL OR PUBLISH IT IN WHOLE OR PART
IV ALL RIGHTS RESERVED

THIS PAGE UNIQUE TO LARGE FORM FACTOR

2ND BACKLIGHT DRIVER - 4LED

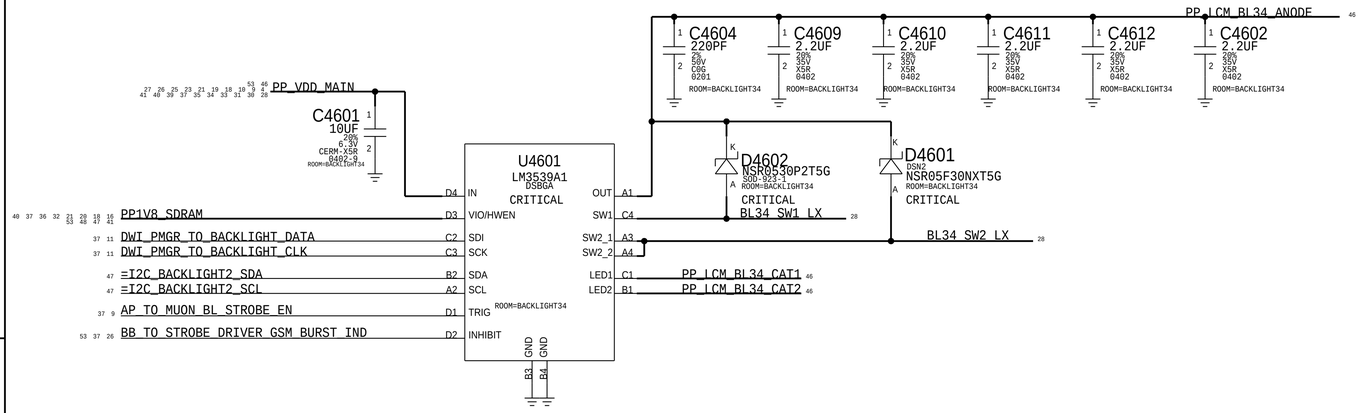

ISP I2C1

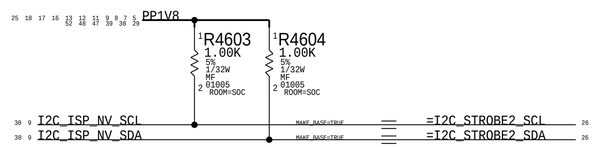

AC Coupling Caps

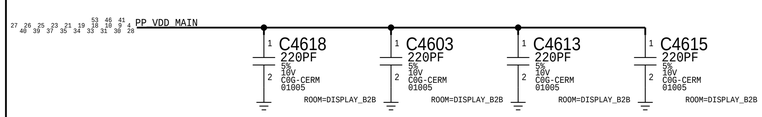

AC return path for LCM MIPI which is referenced to GND and VDD_MAIN

ACC Buck Caps

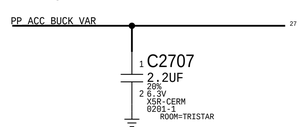

Top Speaker Compass Coil

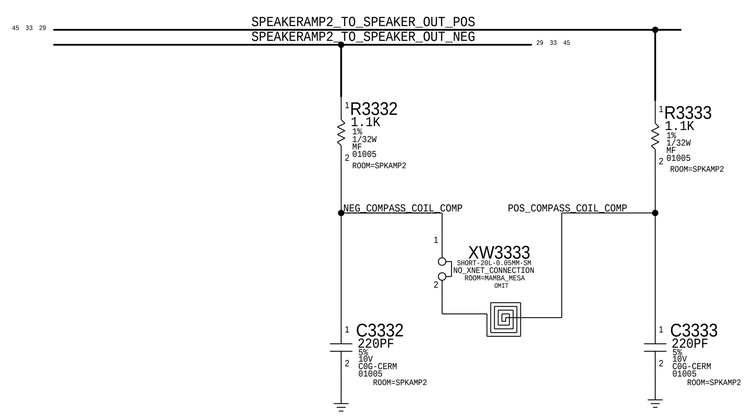

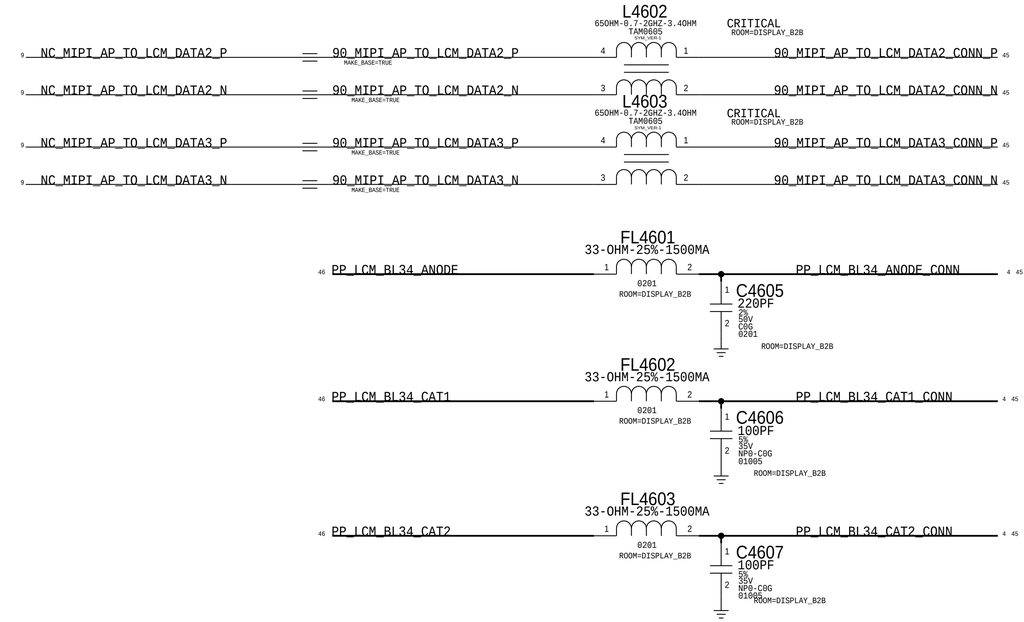

Dock B2B (Pg 41)

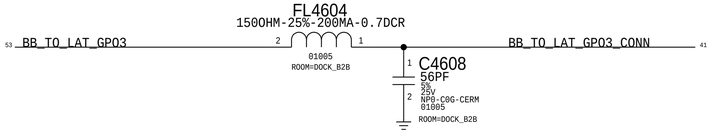

UT B2B

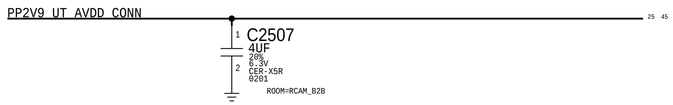

Extra RF GND

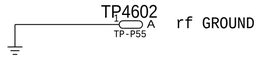

SYNC_MASTER=sync SYNC_DATE=04/28/2016

PAGE TITLE
LARGE FORM FACTOR SPECIFIC

Apple Inc.

DRAWING NUMBER 051-00542 SIZE D

REVISION 5.0.0

BRANCH

PAGE 46 OF 53

SHEET 46 OF 81

NOTICE OF PROPRIETARY PROPERTY:
THE INFORMATION CONTAINED HEREIN IS THE PROPRIETARY PROPERTY OF APPLE INC.
THE POSESSOR AGREES TO THE FOLLOWING:
I TO MAINTAIN THIS DOCUMENT IN CONFIDENCE
II NOT TO REPRODUCE OR COPY IT
III NOT TO REVEAL OR PUBLISH IT IN WHOLE OR PART
IV ALL RIGHTS RESERVED

AP

I2C0

PP1V8

R4701 4.02K 1% 1/32W MF 01005 ROOM=SOC
R4702 4.02K 1% 1/32W MF 01005 ROOM=SOC

I2C0_AP_SCL
I2C0_AP_SDA

#24544434

NOSTUFF C4701 56PF 5% 25V NP0-C0G-CERM 01005 ROOM=SOC
NOSTUFF C4702 56PF 5% 25V NP0-C0G-CERM 01005 ROOM=SOC

MAKE_BASE=TRUE

=I2C_BACKLIGHT1_SCL
=I2C_BACKLIGHT1_SDA
=I2C_BOOST_SCL
=I2C_BOOST_SDA
=I2C_TRISTAR_SCL
=I2C_TRISTAR_SDA
=I2C_CHESTNUT_SCL
=I2C_CHESTNUT_SDA

I2C1

PP1V8

R4703 4.02K 1% 1/32W MF 01005 ROOM=SOC
R4704 4.02K 1% 1/32W MF 01005 ROOM=SOC

I2C1_AP_SCL
I2C1_AP_SDA

#24544426

NOSTUFF C4703 56PF 5% 25V NP0-C0G-CERM 01005 ROOM=PMU
NOSTUFF C4704 56PF 5% 25V NP0-C0G-CERM 01005 ROOM=PMU

MAKE_BASE=TRUE

=I2C_BACKLIGHT2_SCL
=I2C_BACKLIGHT2_SDA
=I2C_PMU_SCL
=I2C_PMU_SDA

D11/111 ONLY

I2C2

PP1V8

R4705 2.2K 5% 1/32W MF 01005 ROOM=SOC
R4706 2.2K 5% 1/32W MF 01005 ROOM=SOC

I2C2_AP_SCL
I2C2_AP_SDA

MAKE_BASE=TRUE

=I2C_TIGRIS_SCL
=I2C_TIGRIS_SDA
=I2C_SPKAMP2_SCL
=I2C_SPKAMP2_SDA

ROOM=FOREHEAD
R4707 0.00 0% 1/32W MF 01005
R4708 0.00 0% 1/32W MF 01005 ROOM=FOREHEAD

I2C_ALS_CONVOY_SCL_CONN
I2C_ALS_CONVOY_SDA_CONN

C4707 56PF 5% 25V NP0-C0G-CERM 01005 ROOM=FOREHEAD
C4708 56PF 5% 25V NP0-C0G-CERM 01005 ROOM=FOREHEAD

TO FOREHEAD FLEX

TOUCH

PP1V8_TOUCH

NOSTUFF R4711 10K 5% 1/32W MF 01005 ROOM=MAMBA_MESA
NOSTUFF R4712 10K 5% 1/32W MF 01005 ROOM=MAMBA_MESA

NOTE:MAMBA I2C 2.2K PULL-UPS TO PP1V8_TOUCH INSIDE GALILEO
ADDING R3803, R3804 AS OPTION FOR TWEAKING VALUE

I2C_TOUCH_TO_MAMBA_SCL
I2C_TOUCH_BI_MAMBA_SDA

MAKE_BASE=TRUE

=I2C_MAMBA_SCL
=I2C_MAMBA_SDA

TO MAMBA / MESA FLEX

NOSTUFF C4709 56PF 5% 25V NP0-C0G-CERM 01005 ROOM=MAMBA_MESA
NOSTUFF C4710 56PF 5% 25V NP0-C0G-CERM 01005 ROOM=MAMBA_MESA

=I2C_TOUCH_SCL
=I2C_TOUCH_SDA

TO DISPLAY / TOUCH FLEX

C4711 56PF 5% 25V NP0-C0G-CERM 01005 ROOM=DISPLAY_B2B
C4712 56PF 5% 25V NP0-C0G-CERM 01005 ROOM=DISPLAY_B2B

HOMER

PP1V8_SDRAM

R4713 1.00K 5% 1/32W MF 01005 ROOM=HOMER
R4714 1.00K 5% 1/32W MF 01005 ROOM=HOMER

I2C_HOMER_SCL
I2C_HOMER_SDA

I2C5

PP1V8

R4715 2.2K 5% 1/32W MF 01005 ROOM=SOC
R4716 2.2K 5% 1/32W MF 01005 ROOM=SOC

I2C5_SCL
I2C5_SDA

I2C3

PP1V8

R4709 2.2K 5% 1/32W MF 01005 ROOM=SOC
R4710 2.2K 5% 1/32W MF 01005 ROOM=SOC

I2C3_AP_SCL
I2C3_AP_SDA

ROOM=DOCK
FL4730 1500HM-25%-200MA-0.7DCR 01005

ckplus_waive=i2c_pullup
I2C_MIC1_SCL_CONN

FL4729 1500HM-25%-200MA-0.7DCR 01005 ROOM=DOCK

CKPLUS_WAIVE=i2c_pullup
I2C_MIC1_SDA_CONN

TO DOCK FLEX

C4730 56PF 5% 25V NP0-C0G-CERM 01005 ROOM=DOCK_B2B
C4729 56PF 5% 25V NP0-C0G-CERM 01005 ROOM=DOCK_B2B

ROOM=RIGHT_BUTTON
FL4732 1500HM-25%-200MA-0.7DCR 01005

I2C_MIC2_SCL_CONN
CKPLUS_WAIVE=I2C_PULLUP

FL4731 1500HM-25%-200MA-0.7DCR 01005 ROOM=RIGHT_BUTTON

I2C_MIC2_SDA_CONN
CKPLUS_WAIVE=I2C_PULLUP

TO COMBINED BUTTON FLEX

C4732 56PF 5% 25V NP0-C0G-CERM 01005 ROOM=RIGHT_BUTTON
C4731 56PF 5% 25V NP0-C0G-CERM 01005 ROOM=RIGHT_BUTTON

FL4742 1500HM-25%-200MA-0.7DCR 01005 ROOM=DISPLAY_B2B

I2C_DISP_EEPROM_SCL_CONN

FL4741 1500HM-25%-200MA-0.7DCR 01005 ROOM=DISPLAY_B2B

I2C_DISP_EEPROM_SDA_CONN

TO DISPLAY FLEX

C4742 56PF 5% 25V NP0-C0G-CERM 01005 ROOM=DISPLAY_B2B
C4741 56PF 5% 25V NP0-C0G-CERM 01005 ROOM=DISPLAY_B2B

PAGE TITLE	I2C MAP: AP, TOUCH, HOMER, I2C5
Apple Inc.	DRAWING NUMBER 051-00542 SIZE D
	REVISION 5.0.0
	BRANCH
	PAGE 47 OF 53
	SHEET 47 OF 81

NOTICE OF PROPRIETARY PROPERTY:
THE INFORMATION CONTAINED HEREIN IS THE PROPRIETARY PROPERTY OF APPLE INC.
THE POSESSOR AGREES TO THE FOLLOWING:
I TO MAINTAIN THIS DOCUMENT IN CONFIDENCE
II NOT TO REPRODUCE OR COPY IT
III NOT TO REVEAL OR PUBLISH IT IN WHOLE OR PART
IV ALL RIGHTS RESERVED

AOP
I2C

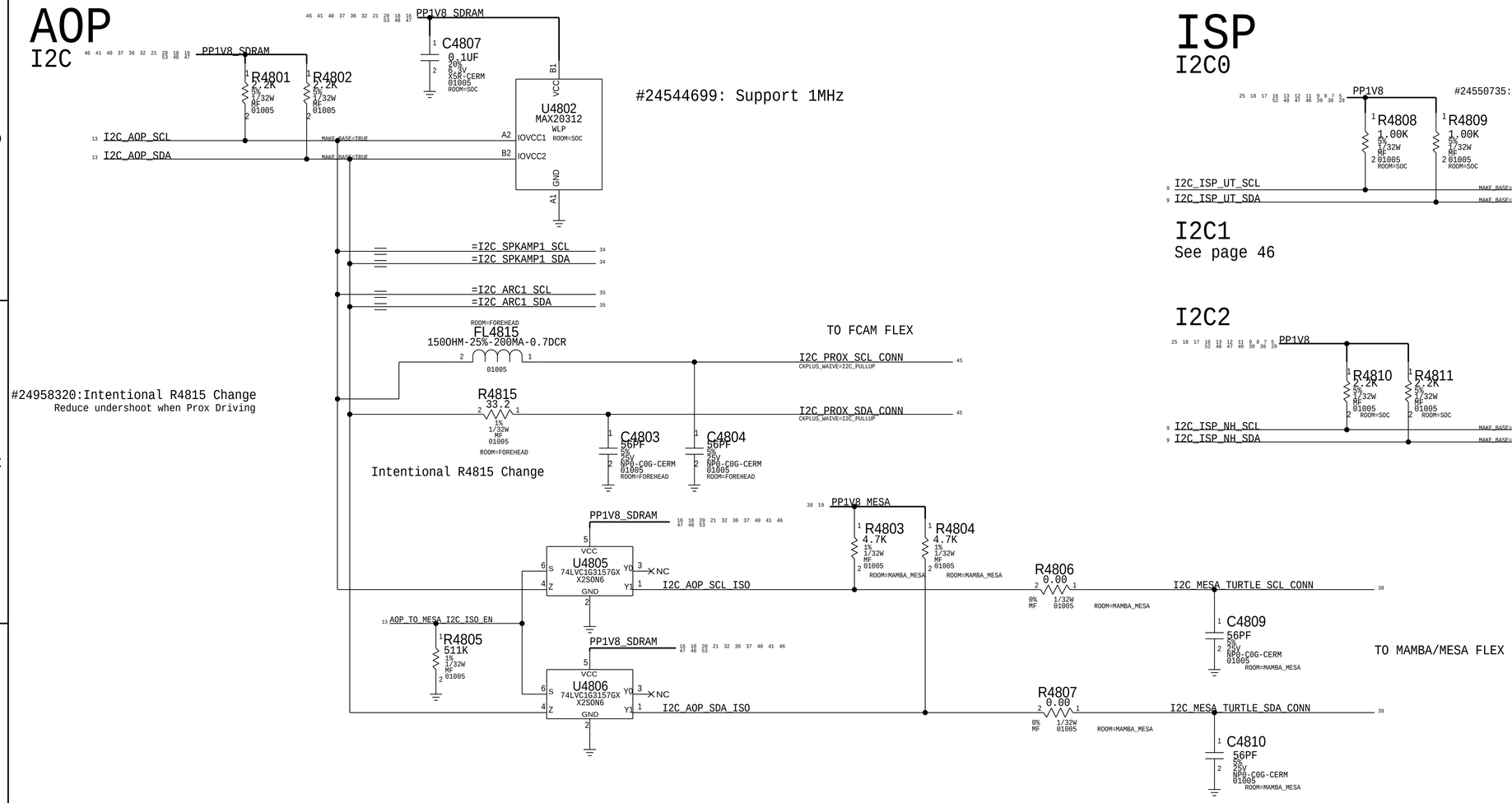

ISP
I2C0

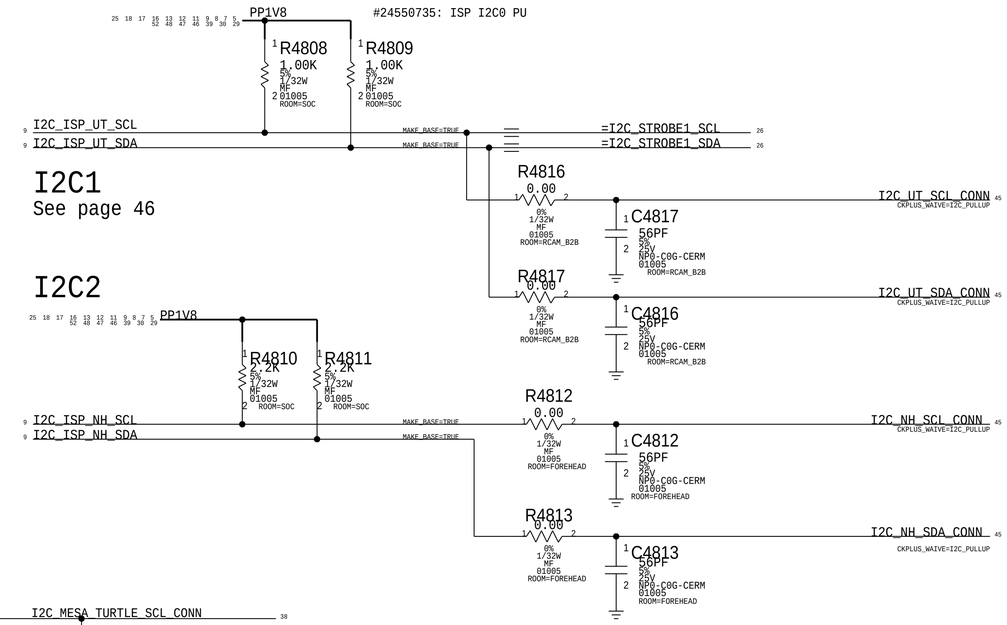

I2C1
See page 46

I2C2

PAGE TITLE	I2C MAP AOP
Apple Inc.	DRAWING NUMBER 051-00542 SIZE D
	REVISION 5.0.0
	BRANCH
	PAGE 48 OF 53
	SHEET 48 OF 81

NOTICE OF PROPRIETARY PROPERTY:
THE INFORMATION CONTAINED HEREIN IS THE PROPRIETARY PROPERTY OF APPLE INC.
THE POSESSOR AGREES TO THE FOLLOWING:
I TO MAINTAIN THIS DOCUMENT IN CONFIDENCE
II NOT TO REPRODUCE OR COPY IT
III NOT TO REVEAL OR PUBLISH IT IN WHOLE OR PART
IV ALL RIGHTS RESERVED

D1x I2C Table

Bus	Device	Binary	7-bit Address	8-bit Address	Max Speed
ISP I2C0 *1MHz*	SALT LAKE (PRIMARY)	0010000X	0x10	0x20	1 MHz
	SALT LAKE (SECONDARY)	0110000X	0x30	0x60	1 MHz
	GRUNBERG (STANDARD)	0011100X	0x1C	0x38	1 MHz
	GRUNBERG (SPECIAL ABSOLUTE R/W)	0011101X	0x1D	0x3A	1 MHz
	GRUNBERG (SPECIAL DELTA READ)	0011110X	0x1E	0x3C	1 MHz
	STROBE 1	1100011X	0x63	0xC6	1 MHz
ISP I2C1 *1MHz*	LAS VEGAS (PRIMARY)	0100000X	0x20	0x40	1 MHz
	LAS VEGAS (SECONDARY)	0110000X	0x30	0x60	1 MHz
	EDWIN	1100011X	0x63	0xC6	400 kHz
	STROBE 2	0000110X	0x06	0x0C	1 MHz
ISP I2C2 *400kHz*	CONCORD	0010000X	0x10	0x20	1 MHz
AOP I2C *1MHz*	ARC DRIVER 1	100000YX	0x41	0x82	1 MHz
	PROX	1011000X	0x58	0xB0	1 MHz
	SPKAMP1 (L26)	100000YX	0x40	0x80	1 MHz
	TURTLE	0101100X	0x2c	0x58	400 kHz
	MESA	1100001X	0x61	0xC2	400 kHz
Touch I2C *600kHz*	MAMBA	1100000X	0x60	0xC0	1 MHz
	MESON	1000000X	0x40	0x80	510 kHz
EEPROM I2C	EEPROM	1010001X	0x51	0xA2	400 kHz
AP I2C0 *400kHz*	BOOST	1110101X	0x75	0xEA	3.4 MHz
	TRISTAR	0011010X	0x1A	0x34	400 kHz
	BACKLIGHT 1	1100010X	0x62	0xC4	1 MHz
	CHESTNUT	0100111X	0x27	0x4E	400 kHz
AP I2C1 *400kHz*	ADELYN	1110100X	0x74	0xE8	400 kHz
	TIGRIS	1110101X	0x75	0xEA	400 kHz
	BACKLIGHT 2	1100010X	0x62	0xC4	1 MHz
AP I2C2 *400kHz*	ALS	0101001X	0x29	0x52	400 kHz
	CONVOY	0100001X	0x21	0x42	3.4 MHz
		0100010X	0x22	0x44	400 kHz
	SPKAMP 2 (L26)	10000ZYX	0x40	0x80	400 MHz
AP I2C3 *100kHz*	DOCK FLEX (MIC1)	1010100X	0x54	0xA8	1 MHz
	COMBINED BUTTON FLEX (MIC2)	1010100X	0x56	0xAC	1 MHz
	DISP EEPROM	1010001X	0x51	0xA2	400kHz
Homer I2C *1MHz*	SCHRODINGER (STANDARD)	0001110X	0xE	0x1C	1 MHz
	SCHRODINGER (CAL REG'S)	0001111X	0xF	0x1D	1 MHz
	EEPROM (STANDARD)	1010000X	0x50	0xA0	
	EEPROM (CONFIG)	1010000X	0x50	0xA0	

PAGE TITLE

I2C TABLE

Apple Inc.

DRAWING NUMBER 051-00542 SIZE D

REVISION 5.0.0

BRANCH

PAGE 49 OF 53

SHEET 49 OF 81

NOTICE OF PROPRIETARY PROPERTY:

THE INFORMATION CONTAINED HEREIN IS THE PROPRIETARY PROPERTY OF APPLE INC.
THE POSESSOR AGREES TO THE FOLLOWING:
I TO MAINTAIN THIS DOCUMENT IN CONFIDENCE
II NOT TO REPRODUCE OR COPY IT
III NOT TO REVEAL OR PUBLISH IT IN WHOLE OR PART
IV ALL RIGHTS RESERVED

8 7 6 5 4 3 2 1

D C B A

8 7 6 5 4 3 2 1

8 7 6 5 4 3 2 1

D C B A

8 7 6 5 4 3 2 1

This page controls elements different accross all MLBs

PCIe Lanes

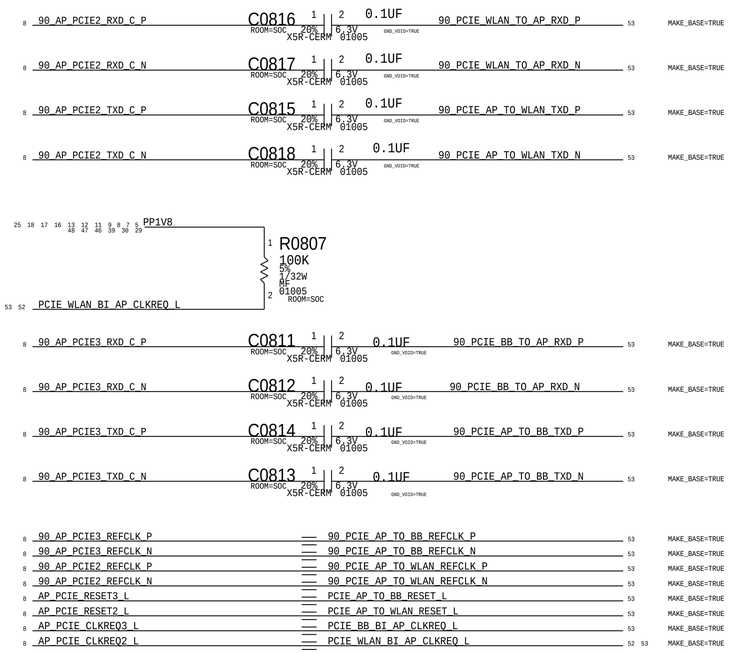

SYNC_DATE=08/20/2015

PAGE TITLE

MLB UNIQUE

Apple Inc.

DRAWING NUMBER 051-00542

SIZE D

REVISION 5.0.0

BRANCH

PAGE 52 OF 53

SHEET 52 OF 81

NOTICE OF PROPRIETARY PROPERTY:

THE INFORMATION CONTAINED HEREIN IS THE PROPRIETARY PROPERTY OF APPLE INC.
THE POSESSOR AGREES TO THE FOLLOWING:
I TO MAINTAIN THIS DOCUMENT IN CONFIDENCE
II NOT TO REPRODUCE OR COPY IT
III NOT TO REVEAL OR PUBLISH IT IN WHOLE OR PART
IV ALL RIGHTS RESERVED

Wifi/BT

I306

80 77 75 69 53 46 41 27 26 25 23 21 19 18 10 9 4 40 39 37 35 34 33 31 30 28 46 41 40 37 36 32 21 20 18 16 80 78 75 55 53 48 47	PP_VDD_MAIN	PP_VDD_MAIN	WiFi_MLB
	PP1V8_SDRAM	PP1V8_SDRAM	
80 20	PMUGPIO_TO_WLAN_CLK32K	PMU_TO_WLAN_32K	
80 20	PMU_TO_WLAN_REG_ON	PMU_TO_WLAN_REG_ON	
80 20	PMU_TO_BT_REG_ON	PMU_TO_BT_REG_ON	
80 20	BT_TO_PMU_HOST_WAKE	BT_TO_PMU_HOST_WAKE	
80 12	AP_TO_BT_WAKE	AP_TO_BT_WAKE	
80 52	90_PCIE_AP_TO_WLAN_REFCLK_P	100_PCIE_AP_TO_WLAN_REFCLK_P	
80 52	90_PCIE_AP_TO_WLAN_REFCLK_N	100_PCIE_AP_TO_WLAN_REFCLK_N	
80 52	90_PCIE_AP_TO_WLAN_TXD_P	100_PCIE_AP_TO_WLAN_TX_P	
80 52	90_PCIE_AP_TO_WLAN_TXD_N	100_PCIE_AP_TO_WLAN_TX_N	
80 52	90_PCIE_WLAN_TO_AP_RXD_P	100_PCIE_WLAN_TO_AP_RX_P	
80 52	90_PCIE_WLAN_TO_AP_RXD_N	100_PCIE_WLAN_TO_AP_RX_N	
80 52	PCIE_AP_TO_WLAN_RESET_L	PCIE_AP_TO_WLAN_PERST_L	
80 52	PCIE_WLAN_BI_AP_CLKREQ_L	PCIE_AP_BI_WLAN_CLKREQ_L	
80 20	WLAN_TO_PMU_HOST_WAKE	PCIE_WLAN_TO_PMU_WAKE	
80 12	AP_TO_WLAN_DEVICE_WAKE	AP_TO_WLAN_DEV_WAKE	
80 12	UART_AP_TO_WLAN_TXD	UART_AP_TO_WLAN_TXD	
80 12	UART_WLAN_TO_AP_RXD	UART_WLAN_TO_AP_RXD	
80 12	UART_AP_TO_WLAN_RTS_L	UART_AP_TO_WLAN_RTS_L	
80 12	UART_WLAN_TO_AP_CTS_L	UART_WLAN_TO_AP_CTS_L	
80 12	UART_AP_TO_BT_TXD	UART_AP_TO_BT_TXD	
80 12	UART_BT_TO_AP_RXD	UART_BT_TO_AP_RXD	
80 12	UART_AP_TO_BT_RTS_L	UART_AP_TO_BT_RTS_L	
80 12	UART_BT_TO_AP_CTS_L	UART_BT_TO_AP_CTS_L	
80 13	AOP_TO_WLAN_CONTEXT_A	AOP_TO_WLAN_CONTEXT_A	
80 13	AOP_TO_WLAN_CONTEXT_B	AOP_TO_WLAN_CONTEXT_B	
80 11	I2S_AP_TO_BT_BCLK	I2S_AP_TO_BT_BCLK	
80 11	I2S_AP_TO_BT_LRCLK	I2S_AP_TO_BT_LRCK	
80 11	I2S_BT_TO_AP_DIN	I2S_BT_TO_AP_DIN	
80 11	I2S_AP_TO_BT_DOUT	I2S_AP_TO_BT_DOUT	
80 55 53	UART_BB_TO_WLAN_COEX	UART_BB_TO_WLAN_COEX	
80 55 53	UART_WLAN_TO_BB_COEX	UART_WLAN_TO_BB_COEX	
81 77 53	50_UAT_WLAN_5G_WEST	50_UAT_WLAN_5G_WEST	
81 77 53	50_UAT_WLAN_2G_EAST	50_UAT_WLAN_2G_EAST	
81 77 53	50_UAT_WLAN_5G_EAST	50_UAT_WLAN_5G_EAST	
80 77 53	50_WLAN_G_1	50_WLAN_G_1	
80 77 53	50_WLAN_A_1	50_WLAN_A_1	
81 78 53	50_UAT2_M	50_UAT2_M	

Cellular

Aliases used to correct name for Karoo radio system

80 77 75 69 53 46 41 27 26 25 23 21 19 18 10 9 4 40 39 37 35 34 33 31 30 28 46 41 40 37 36 32 21 20 18 16 80 78 75 55 53 48 47	PP_VDD_MAIN	PP_VDD_MAIN	RADIO_MLB
	PP1V8_SDRAM	PP1V8_SDRAM	
58 20	BBPMU_TO_PMU_AMUX1	BBPMU_TO_PMU_AMUX1	
58 20	BBPMU_TO_PMU_AMUX2	BBPMU_TO_PMU_AMUX2	
58 20	BBPMU_TO_PMU_AMUX3	BBPMU_TO_PMU_AMUX3	
Opposite polarity on Eureka --> 12	AP_TO_BBPMU_RADIO_ON_L	MAKE_BASE=TRUE 55 AP_TO_BBPMU_SDWN_L	AP_TO_BBPMU_SDWN_L
28	PMU_TO_BBPMU_RESET_L	MAKE_BASE=TRUE PMU_TO_BBPMU_ON	PMU_TO_BBPMU_ON
Eureka names		56 12 AP_TO_BB_RESET_L	AP_TO_BB_RESET_L
12	NC_BB_TO_AP_RESET_ACT_L	MAKE_BASE=TRUE BB_TO_AP_RESET_ACT_L	BB_TO_AP_RESET_ACT_L
		55 12 BB_TO_AP_RESET_DETECT_L	BB_TO_AP_RESET_DETECT_L
		55 46 37 26 BB_TO_STROBE_DRIVER_GSM_BURST_IND	BB_TO_AP_GSM_TXBURST
		55 12 AP_TO_BB_MESA_ON	AP_TO_BB_MESA_ON
		55 12 AP_TO_BB_TIME_MARK	AP_TO_BB_TIME_MARK
		55 12 AP_TO_BB_COREDUMP	AP_TO_BB_COREDUMP_TRIG
			TOUCH_TO_BBPMU_FORCE_PWM
		55 12 AP_TO_BB_IPC_GPIO1	AP_TO_BB_IPC_GPIO
12	NC_AP_TO_BB_IPC_GPIO2	MAKE_BASE=TRUE AP_TO_BB_IPC_GPIO2	AP_TO_BB_IPC_GPIO2
		55 52 90_PCIE_AP_TO_BB_REFCLK_P	100_PCIE_AP_TO_BB_REFCLK_P
		55 52 90_PCIE_AP_TO_BB_REFCLK_N	100_PCIE_AP_TO_BB_REFCLK_N
		55 52 90_PCIE_AP_TO_BB_TXD_P	100_PCIE_AP_TO_BB_TX_P
		55 52 90_PCIE_AP_TO_BB_TXD_N	100_PCIE_AP_TO_BB_TX_N
		55 52 90_PCIE_BB_TO_AP_RXD_P	100_PCIE_BB_TO_AP_RX_P
		55 52 90_PCIE_BB_TO_AP_RXD_N	100_PCIE_BB_TO_AP_RX_N
		55 52 PCIE_AP_TO_BB_RESET_L	PCIE_AP_TO_BB_PERST_L
		55 52 PCIE_BB_BI_AP_CLKREQ_L	PCIE_AP_BI_BB_CLKREQ_L
		55 26 BB_TO_PMU_PCIE_HOST_WAKE_L	PCIE_BB_TO_PMU_WAKE_L
			AP_TO_BB_DEVICE_WAKE
		NC	UART_AP_TO_BB_TXD
		NC	UART_BB_TO_AP_RXD
		55 13 UART_AOP_TO_BB_TXD	UART_AOP_TO_BB_TXD
		55 13 UART_BB_TO_AOP_RXD	UART_BB_TO_AOP_RXD
		55 11 I2S_BB_TO_AP_BCLK	I2S_AP_TO_BB_BCLK
		55 11 I2S_BB_TO_AP_LRCLK	I2S_AP_TO_BB_LRCLK
		55 11 I2S_AP_TO_BB_DOUT	I2S_AP_TO_BB_DOUT
		55 11 I2S_BB_TO_AP_DIN	I2S_BB_TO_AP_DIN
		80 55 53 UART_BB_TO_WLAN_COEX	UART_BB_TO_WLAN_COEX
		80 55 53 UART_WLAN_TO_BB_COEX	UART_WLAN_TO_BB_COEX
		75 69 53 SIM1_SWP	SIM1_SWP
			SIM2_SWP
		75 59 53 NFC_TO_BB_CLK_REQ	NFC_TO_BB_CLKREQ
		75 59 53 BB_TO_NFC_CLK	BB_TO_NFC_CLK
20	NC_PMU_TO_GNSS_EN	MAKE_BASE=TRUE PMU_TO_GNSS_EN	PMU_TO_GNSS_EN
12	NC_AP_UART2_TXD	MAKE_BASE=TRUE UART_AP_TO_GNSS_TXD	UART_AP_TO_GNSS_TXD
12	NC_AP_UART2_RXD	MAKE_BASE=TRUE UART_GNSS_TO_AP_RXD	UART_GNSS_TO_AP_RXD
12	NC_AP_UART2_RTS_L	MAKE_BASE=TRUE UART_AP_TO_GNSS_RTS_L	UART_AP_TO_GNSS_RTS_L
12	NC_AP_UART2_CTS_L	MAKE_BASE=TRUE UART_GNSS_TO_AP_CTS_L	UART_GNSS_TO_AP_CTS_L
20	NC_GNSS_TO_PMU_HOST_WAKE	MAKE_BASE=TRUE GNSS_TO_PMU_HOST_WAKE	GNSS_TO_PMU_HOST_WAKE
12	NC_AP_TO_GNSS_TIME_MARK	MAKE_BASE=TRUE AP_TO_GNSS_TIME_MARK	AP_TO_GNSS_TIME_MARK
12	NC_AP_TO_GNSS_WAKE	MAKE_BASE=TRUE AP_TO_GNSS_WAKE	AP_TO_GNSS_DEVICE_WAKE
		56 36 17 13 SWD_AP_TO_MANY_SWCLK	SWD_AP_TO_BB_CLK
		56 13 SWD_AOP_BI_BB_SWDIO	SWD_AP_BI_BB_IO
		55 20 PMU_TO_BB_USB_VBUS_DETECT	USB_BB_VBUS
		55 40 90_USB_BB_DATA_P	90_USB_BB_P
		55 40 90_USB_BB_DATA_N	90_USB_BB_N
			50_UAT_WLAN_2G_WEST
			50_UAT_LB_NORTH
			50_UAT_LB_SOUTH
			50_UAT_MB_HB_SOUTH
			50_UAT_MB_HB_WEST
			50_UAT1_TUNER
			LAT_TUNER_RFFE_CLK
			LAT_TUNER_RFFE_DATA
			UAT_TUNER_GPO
			UAT_TUNER_RFFE_CLK
			UAT_TUNER_RFFE_DATA
			LAT_TUNER_GPO1
			LAT_TUNER_GPO2
			LAT_TUNER_GPO3

NFC

80 77 75 69 53 46 41 27 26 25 23 21 19 18 10 9 4 40 39 37 35 34 33 31 30 28 46 41 40 37 36 32 21 20 18 16 80 78 75 55 53 48 47	PP_VDD_MAIN	PP_VDD_MAIN	STOCKHOLM_MLB
	PP1V8_SDRAM	PP1V8_SDRAM	
75 20	PMU_TO_NFC_EN	PMU_TO_NFC_EN	
75 59 53	BB_TO_NFC_CLK	BB_TO_NFC_CLK	
75 59 53	NFC_TO_BB_CLK_REQ	NFC_TO_BB_CLK_REQ	
75 12	AP_TO_NFC_FW_DWLD_REQ	AP_TO_NFC_FW_DWLD	
75 12	AP_TO_NFC_DEV_WAKE	AP_TO_NFC_DEV_WAKE	
75 20	NFC_TO_PMU_HOST_WAKE	NFC_TO_PMU_HOST_WAKE	
75 12	UART_AP_TO_NFC_TXD	UART_AP_TO_NFC_TXD	
75 12	UART_NFC_TO_AP_RXD	UART_NFC_TO_AP_RXD	
75 12	UART_AP_TO_NFC_RTS_L	UART_AP_TO_NFC_RTS_L	
75 12	UART_NFC_TO_AP_CTS_L	UART_NFC_TO_AP_CTS_L	
75 69 53	SIM1_SWP	NFC_SWP	
75	NC_SE2_READY	SE2_READY	
75	NC_SE2_PWR_REQ	SE2_PWR_REQ	
75	NC_SE2_PRESENT	SE2_PRESENT	
75	NC_NFC_SWP_MUX	NFC_SWP_MUX	
75	NC_ICEFALL_LDO_ENABLE	ICEFALL_LDO_ENABLE	

FF SPECIFIC

RADIO_MLB_FF

80 77 53	50_WLAN_A_1	50_WLAN_A_1	50_UAT_WLAN_2G_WEST	77 67 50_UAT_WLAN_2G_WEST
80 77 53	50_WLAN_G_1	50_WLAN_G_1	50_UAT_LB_NORTH	77 66 50_UAT_LB_NORTH
81 77 53	50_UAT_WLAN_5G_EAST	50_UAT_WLAN_5G_EAST	50_UAT_LB_SOUTH	77 64 50_UAT_LB_SOUTH
81 77 53	50_UAT_WLAN_2G_EAST	50_UAT_WLAN_2G_EAST	50_UAT_MB_HB_SOUTH	77 64 50_UAT_MB_HB_SOUTH
81 77 53	50_UAT_WLAN_5G_WEST	50_UAT_WLAN_5G_WEST	50_UAT_MB_HB_WEST	77 66 50_UAT_MB_HB_WEST
81 78 53	50_UAT2_M	50_UAT2_M	50_UAT1_TUNER	78 67 50_UAT1_TUNER
		PP3V0_TRISTAR		PP3V0_TRISTAR_ANT_PROX
		VDD_TUNER_RFFE_VIO_1V8		19 29 40 41 78 PP1V8_SDRAM
		UAT_TUNER_RFFE_CLK		53 66 78 BB_TO_UAT_ANT_SCLK
27 26 25 23 21 19 18 10 9 4 41 40 39 37 35 34 33 31 30 28	PP_VDD_MAIN	PP_VDD_MAIN	UAT_TUNER_RFFE_DATA	53 66 78 BB_TO_UAT_ANT_DATA
			UAT_TUNER_GPO	53 64 78 BB_TO_UAT_TUNER_GPO

P2MM-NSM SM ROOM=UAT_DEBUG	PP5304	1
P2MM-NSM SM ROOM=UAT_DEBUG	PP5301	1
P2MM-NSM SM ROOM=UAT_DEBUG	PP5302	1
P2MM-NSM SM ROOM=UAT_DEBUG	PP5303	1

64 41	BB_TO_LAT_ANT_SCLK
64 41	BB_TO_LAT_ANT_DATA
78 64 53	BB_TO_UAT_TUNER_GPO
78 66 53	BB_TO_UAT_ANT_SCLK
78 66 53	BB_TO_UAT_ANT_DATA
64 41	BB_TO_LAT_GPO1
64 41	BB_TO_LAT_GPO2
64 46	BB_TO_LAT_GPO3

PAGE TITLE: CELL,WIFI,NFC

Apple Inc.

DRAWING NUMBER: 051-00542 SIZE: D

REVISION: 5.0.0

BRANCH

PAGE: 53 OF 53

SHEET: 53 OF 81

NOTICE OF PROPRIETARY PROPERTY:
THE INFORMATION CONTAINED HEREIN IS THE PROPRIETARY PROPERTY OF APPLE INC.
THE POSESSOR AGREES TO THE FOLLOWING:
I TO MAINTAIN THIS DOCUMENT IN CONFIDENCE
II NOT TO REPRODUCE OR COPY IT
III NOT TO REVEAL OR PUBLISH IT IN WHOLE OR PART
IV ALL RIGHTS RESERVED

1. ALL RESISTANCE VALUES ARE IN OHMS, 0.1 WATT +/- 5%.
2. ALL CAPACITANCE VALUES ARE IN MICROFARADS.
3. ALL CRYSTALS & OSCILLATOR VALUES ARE IN HERTZ.

REV	ECN	DESCRIPTION OF REVISION	CK APPD / DATE
5	0006232160	ENGINEERING RELEASED	2016-05-16

ICE16 RADIO_MLB

Mon May 16 14:17:24 2016

PDF PAGE	CSA PAGE	CONTENTS
2	55	BASEBAND
3	56	BASEBAND MEMORY/DEBUG
4	57	BASEBAND POWER
5	58	BASEBAND PMIC
6	59	TRANSCEIVERS
7	60	ET MODULATOR
8	61	TDD TRANSMIT
9	62	FDD TRANSMIT
10	63	PRIMARY RECEIVE
11	64	LOWER ANTENNA & COUPLERS
12	65	DIVERSITY RECEIVE ASM'S
13	66	DIVERSITY RECEIVE LNA'S
14	67	UPPER ANTENNA FEEDS
15	68	GNSS
16	69	TEST POINTS & SIM

ALTERNATES

PART NUMBER	ALTERNATE FOR PART NUMBER	REFERENCE DESIGNATOR(S)	DESCRIPTION	BOM OPTION
197S00040	197S00044	VTCXO_RF	AVX VC-TCXO	?
197S00042	197S00044	VTCXO_RF	NDK VC-TCXO	?
197S00039	197S00043	GTCXO_RF	AVX VC-TCXO	?
197S00041	197S00043	GTCXO_RF	NDK VC-TCXO	?
335S00013	335S0894	EPROM_RF	ON SEMI EEPROM	?
138S0719	138S1103	C5820_RF	MURATA	?
138S0706	138S0739	C5811_RF, C5813_RF, C5815_RF, C5905_RF, C5913_RF	MURATA	?
138S0945	138S0739	C5811_RF, C5813_RF, C5815_RF, C5905_RF, C5913_RF	KYOCERA	?

BOM OPTIONS

PART#	QTY	DESCRIPTION	REFERENCE DESIGNATOR(S)	BOM OPTION
998-03730	1	BASEBAND, UNFUSED	BB_RF	BB_UNFUSED
998-03731	1	BASEBAND, LOCAL FUSED	BB_RF	BB_LOCAL_FUSED
998-03732	1	BASEBAND, DEV FUSED	BB_RF	BB_DEV_FUSED
337S00127	1	BASEBAND, PRODUCTION FUSED	BB_RF	BB_PROD_FUSED

SCH: 951-00673
BOM: 939-00555

RADIO_MLB PORTS

POWER

69 68 61 60 59 58 53	IN	PP_VDD_MAIN	
69 68 64 59 58 57 56 55 53	IN	PP1V8_SDRAM	

AMUX

58 53	OUT	BBPMU_TO_PMU_AMUX1	
58 53	OUT	BBPMU_TO_PMU_AMUX2	
58 53	OUT	BBPMU_TO_PMU_AMUX3	

BB CONTROL

		AP_TO_BBPMU_RADIO_ON_L	
		PMU_TO_BBPMU_RESET_L	
69 56 53	IN	AP_TO_BB_RESET_L	
56 53	OUT	BB_TO_AP_RESET_ACT_L	
55 53	OUT	BB_TO_AP_RESET_DETECT_L	
69 55 53	OUT	BB_TO_AP_GSM_TXBURST	
69 55 53	IN	AP_TO_BB_MESA_ON	
69 55 53	IN	AP_TO_BB_TIME_MARK	
55 53	IN	AP_TO_BB_COREDUMP_TRIG	
		TOUCH_TO_BBPMU_FORCE_PWM	
55 53	IN	AP_TO_BB_IPC_GPIO	
55 53	IN	AP_TO_BB_IPC_GPIO2	

		AP_TO_BBPMU_SDWN_L	OUT 53 55 58 69
		PMU_TO_BBPMU_ON	OUT 53 58 69

PCIE

55 53	IN	100_PCIE_AP_TO_BB_REFCLK_P
55 53	IN	100_PCIE_AP_TO_BB_REFCLK_N
69 55 53	IN	100_PCIE_AP_TO_BB_TX_P
69 55 53	IN	100_PCIE_AP_TO_BB_TX_N
55 53	OUT	100_PCIE_BB_TO_AP_RX_P
69 55 53	OUT	100_PCIE_BB_TO_AP_RX_N
69 55 53	IN	PCIE_AP_TO_BB_PERST_L
16 2	IO	PCIE_AP_BI_BB_CLKREQ_L
69 55 53	OUT	PCIE_BB_TO_PMU_WAKE_L
		AP_TO_BB_DEVICE_WAKE

UART

69 55	IN	UART_AP_TO_BB_TXD
69 55	OUT	UART_BB_TO_AP_RXD

AOP

55 53	IN	UART_AOP_TO_BB_TXD
55 53	OUT	UART_BB_TO_AOP_RXD

AUDIO

55 53	IN	I2S_AP_TO_BB_BCLK
55 53	IN	I2S_AP_TO_BB_LRCLK
55 53	IN	I2S_AP_TO_BB_DOUT
55 53	OUT	I2S_BB_TO_AP_DIN

WLAN

69 55 53	IN	UART_BB_TO_WLAN_COEX
69 55 53	OUT	UART_WLAN_TO_BB_COEX

NFC

16	IO	SIM1_SWP
		SIM2_SWP
59 53	IN	NFC_TO_BB_CLKREQ
59 53	OUT	BB_TO_NFC_CLK

GNSS

69 68 53	IN	PMU_TO_GNSS_EN
69 68 53	IN	UART_AP_TO_GNSS_TXD
69 68 53	OUT	UART_GNSS_TO_AP_RXD
69 68 53	IN	UART_AP_TO_GNSS_RTS_L
69 68 53	OUT	UART_GNSS_TO_AP_CTS_L
69 68 53	OUT	GNSS_TO_PMU_HOST_WAKE
69 68 53	IN	AP_TO_GNSS_TIME_MARK
68 53	IN	AP_TO_GNSS_DEVICE_WAKE

DEBUG

56 53	IN	SWD_AP_TO_BB_CLK
3	IO	SWD_AP_BI_BB_IO
69 55 53	IN	USB_BB_VBUS
16 2	IO	90_USB_BB_P
16 2	IO	90_USB_BB_N

ANTENNA

14	IO	50_UAT_WLAN_2G_WEST
13	IO	50_UAT_LB_NORTH
11	IO	50_UAT_LB_SOUTH
11	IO	50_UAT_MB_HB_SOUTH
13	IO	50_UAT_MB_HB_WEST
14	IO	50_UAT1_TUNER

TUNER

	OUT	LAT_TUNER_RFFE_CLK	RFFE1_CLK_FILT	11 12
	IO	LAT_TUNER_RFFE_DATA	RFFE1_DATA_FILT	11 12
64 53	OUT	UAT_TUNER_GPO		
66 53	OUT	UAT_TUNER_RFFE_CLK		
13	IO	UAT_TUNER_RFFE_DATA		

64 53	OUT	LAT_TUNER_GPO1
64 53	OUT	LAT_TUNER_GPO2
64 53	OUT	LAT_TUNER_GPO3

PAGE1

DRAWING TITLE: SCH,MLB,D111

Apple Inc.

DRAWING NUMBER: 051-00542 SIZE: D
REVISION: 5.0.0
BRANCH:
PAGE: 1 OF 73
SHEET: 54 OF 81

NOTICE OF PROPRIETARY PROPERTY:
THE INFORMATION CONTAINED HEREIN IS THE PROPRIETARY PROPERTY OF APPLE INC.
THE POSESSOR AGREES TO THE FOLLOWING:
I TO MAINTAIN THIS DOCUMENT IN CONFIDENCE
II NOT TO REPRODUCE OR COPY IT
III NOT TO REVEAL OR PUBLISH IT IN WHOLE OR PART
IV ALL RIGHTS RESERVED

CONFIDENTIAL AND PROPRIETARY APPLE SYSTEM DESIGN. FOR REFERENCE PURPOSE ONLY - NOT A CHANGE REQUEST

BASEBAND

BB EEPROM

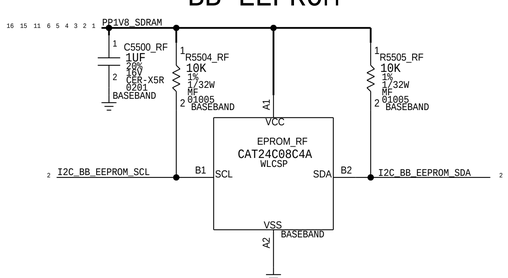

CONFIDENTIAL AND PROPRIETARY APPLE SYSTEM DESIGN. FOR REFERENCE PURPOSE ONLY - NOT A CHANGE REQUEST

PAGE TITLE	BASEBAND
Apple Inc.	DRAWING NUMBER 051-00542 SIZE D
	REVISION 5.0.0
	BRANCH
	PAGE 55 OF 73
	SHEET 55 OF 81

NOTICE OF PROPRIETARY PROPERTY:
THE INFORMATION CONTAINED HEREIN IS THE PROPRIETARY PROPERTY OF APPLE INC.
THE POSESSOR AGREES TO THE FOLLOWING:
I TO MAINTAIN THIS DOCUMENT IN CONFIDENCE
II NOT TO REPRODUCE OR COPY IT
III NOT TO REVEAL OR PUBLISH IT IN WHOLE OR PART
IV ALL RIGHTS RESERVED

BASEBAND MEMORY/DEBUG

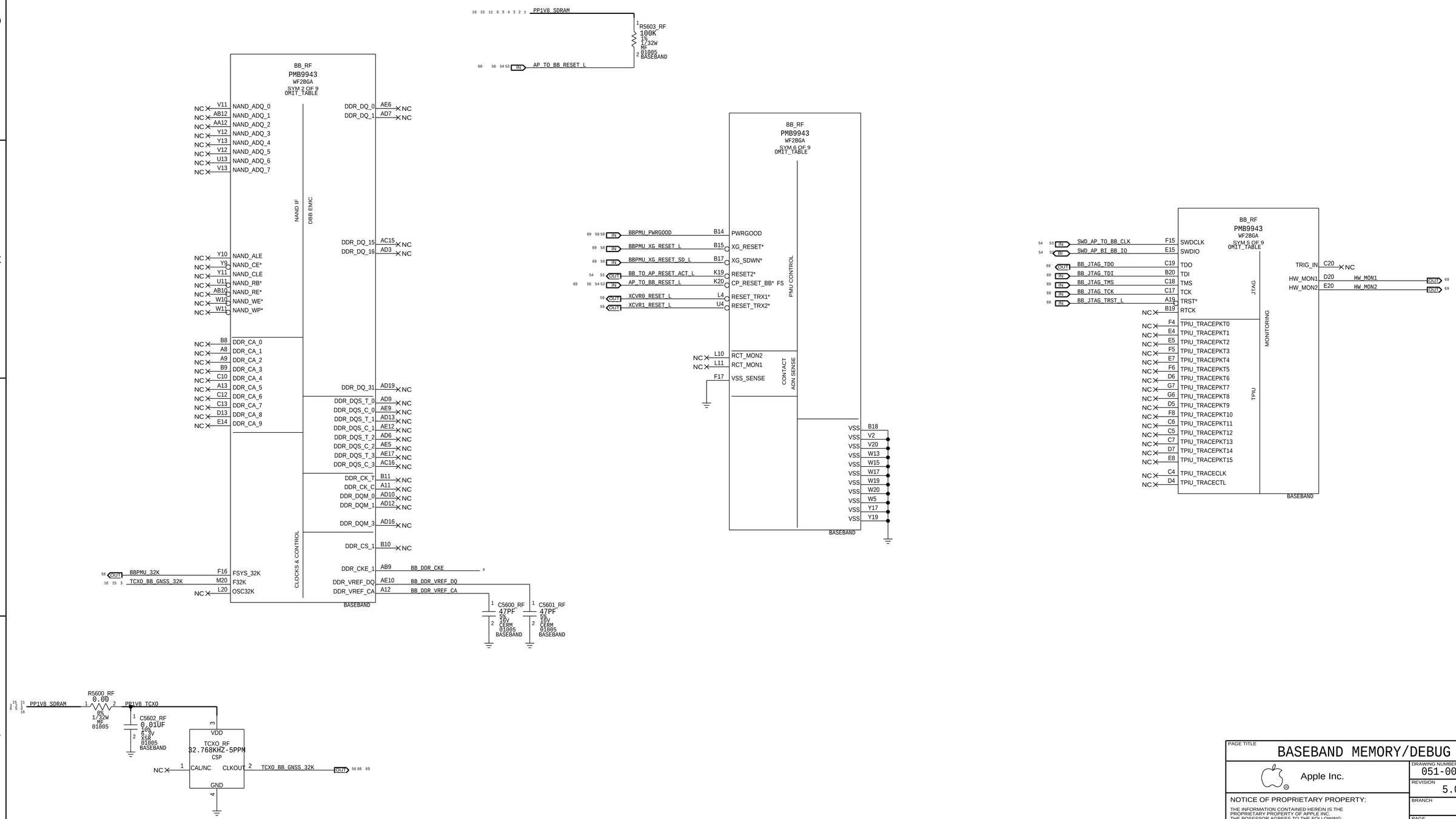

CONFIDENTIAL AND PROPRIETARY APPLE SYSTEM DESIGN. FOR REFERENCE PURPOSE ONLY - NOT A CHANGE REQUEST

PAGE TITLE: BASEBAND MEMORY/DEBUG

Apple Inc.

DRAWING NUMBER: 051-00542 SIZE: D

REVISION: 5.0.0

BRANCH:

PAGE: 56 OF 73

SHEET: 56 OF 81

NOTICE OF PROPRIETARY PROPERTY:
THE INFORMATION CONTAINED HEREIN IS THE PROPRIETARY PROPERTY OF APPLE INC.
THE POSESSOR AGREES TO THE FOLLOWING:
I TO MAINTAIN THIS DOCUMENT IN CONFIDENCE
II NOT TO REPRODUCE OR COPY IT
III NOT TO REVEAL OR PUBLISH IT IN WHOLE OR PART
IV ALL RIGHTS RESERVED

BASEBAND POWER

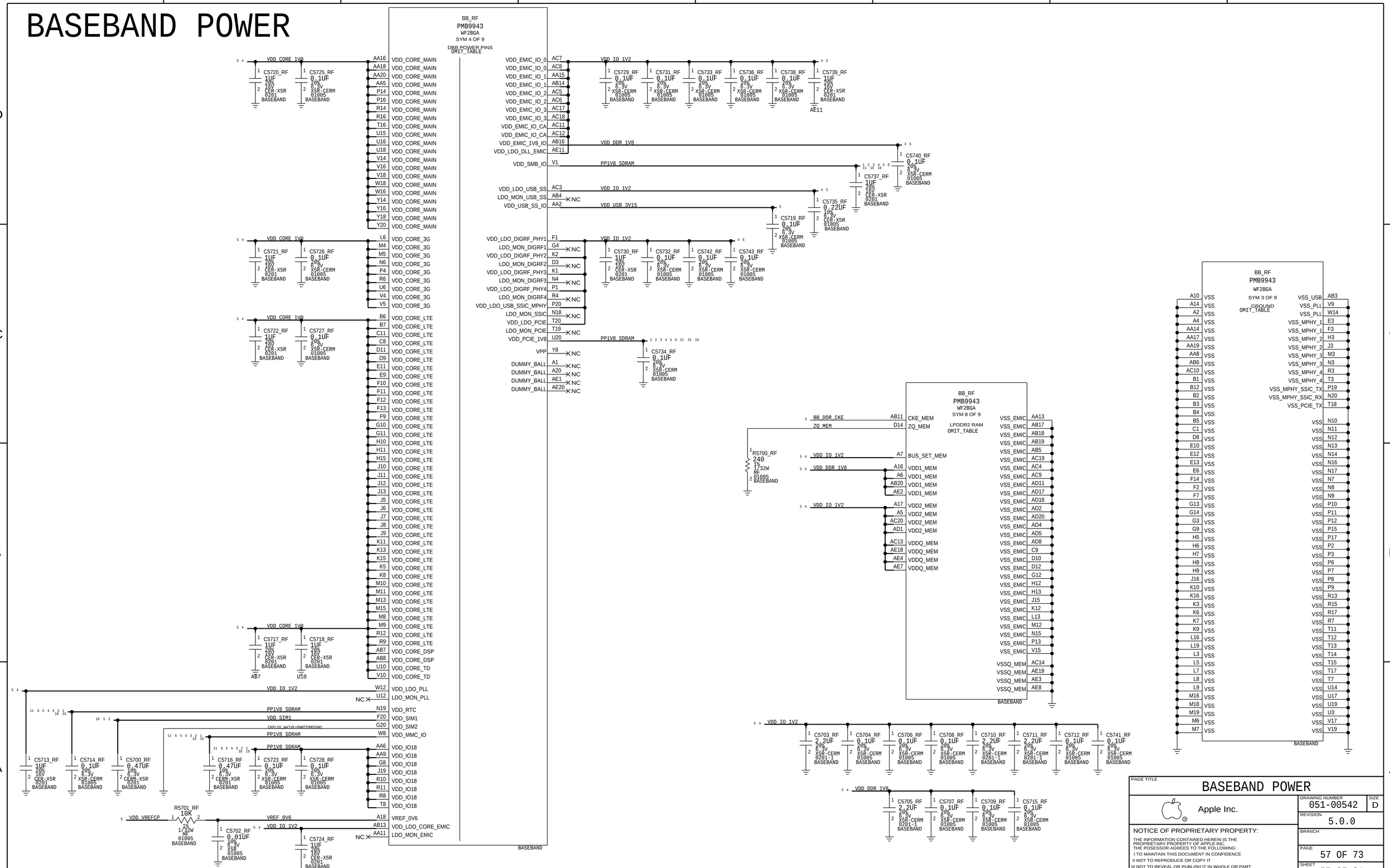

CONFIDENTIAL AND PROPRIETARY APPLE SYSTEM DESIGN. FOR REFERENCE PURPOSE ONLY - NOT A CHANGE REQUEST

PAGE TITLE: BASEBAND POWER

Apple Inc.

DRAWING NUMBER: 051-00542 SIZE: D

REVISION: 5.0.0

BRANCH

PAGE: 57 OF 73

SHEET: 57 OF 81

NOTICE OF PROPRIETARY PROPERTY:
THE INFORMATION CONTAINED HEREIN IS THE PROPRIETARY PROPERTY OF APPLE INC.
THE POSESSOR AGREES TO THE FOLLOWING:
I TO MAINTAIN THIS DOCUMENT IN CONFIDENCE
II NOT TO REPRODUCE OR COPY IT
III NOT TO REVEAL OR PUBLISH IT IN WHOLE OR PART
IV ALL RIGHTS RESERVED

BASEBAND PMIC

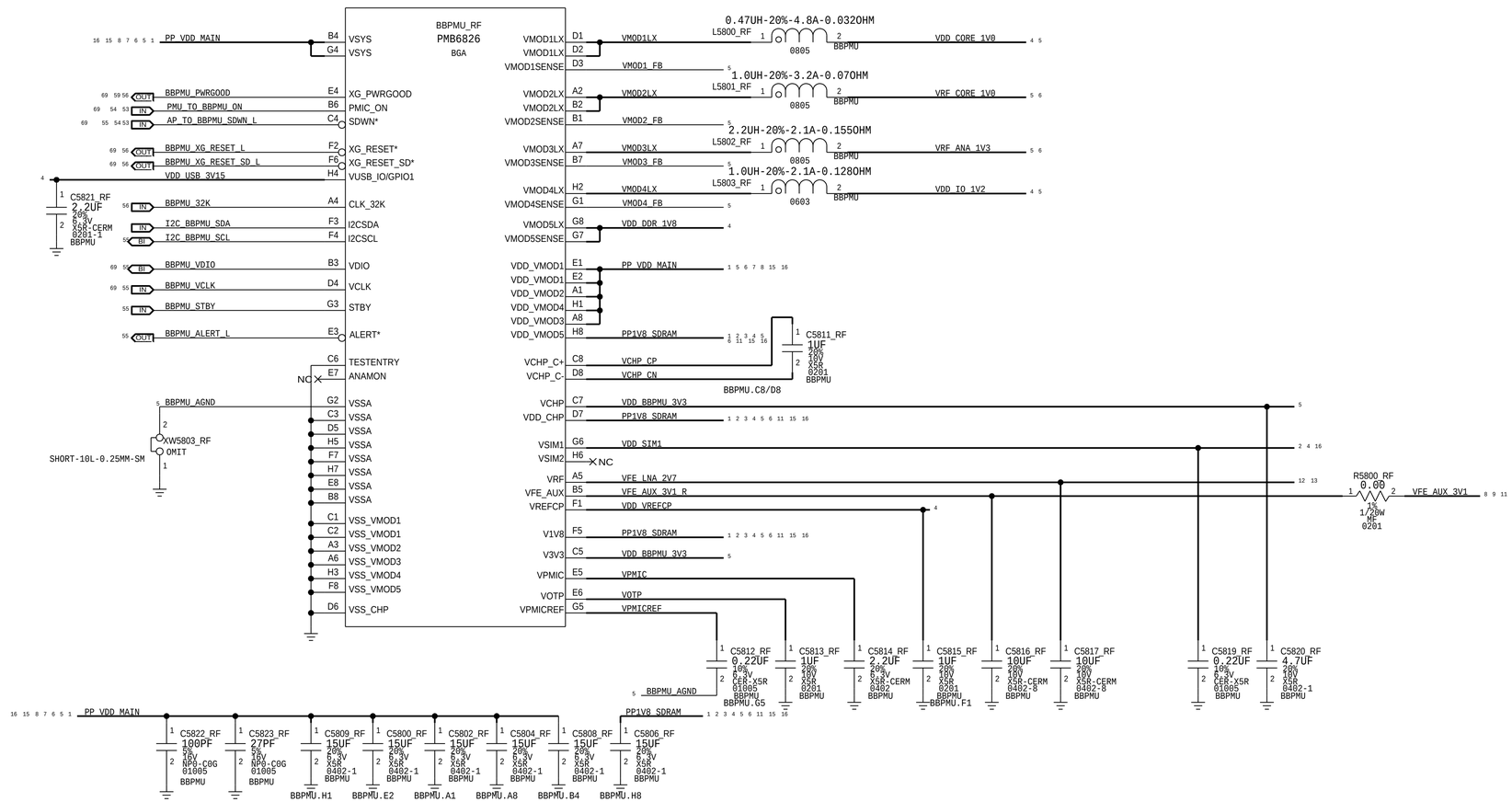

CONFIDENTIAL AND PROPRIETARY APPLE SYSTEM DESIGN. FOR REFERENCE PURPOSE ONLY - NOT A CHANGE REQUEST

PAGE TITLE	BASEBAND PMIC
Apple Inc.	DRAWING NUMBER 051-00542 SIZE D
	REVISION 5.0.0
	BRANCH
	PAGE 58 OF 73
	SHEET 58 OF 81

NOTICE OF PROPRIETARY PROPERTY:
THE INFORMATION CONTAINED HEREIN IS THE PROPRIETARY PROPERTY OF APPLE INC.
THE POSESSOR AGREES TO THE FOLLOWING:
I TO MAINTAIN THIS DOCUMENT IN CONFIDENCE
II NOT TO REPRODUCE OR COPY IT
III NOT TO REVEAL OR PUBLISH IT IN WHOLE OR PART
IV ALL RIGHTS RESERVED

TRANSCEIVERS

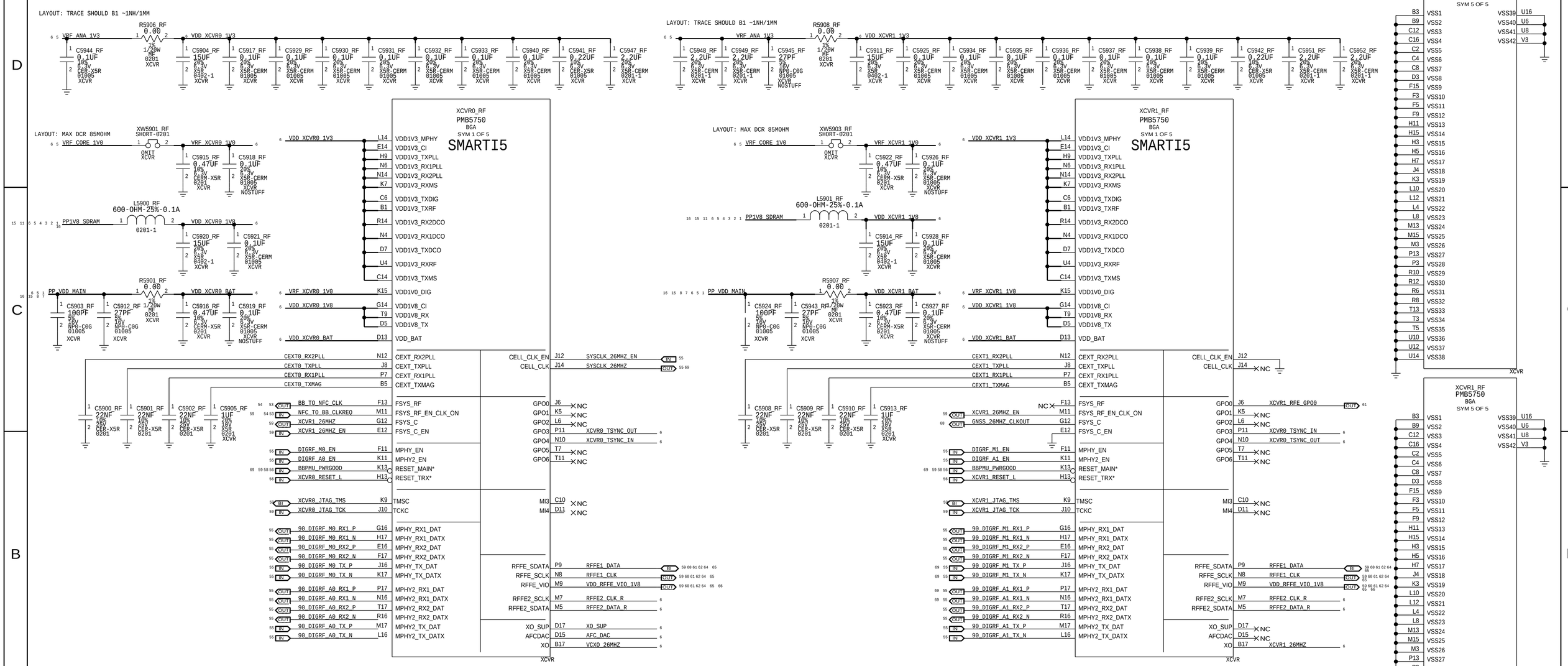

VCTCX0

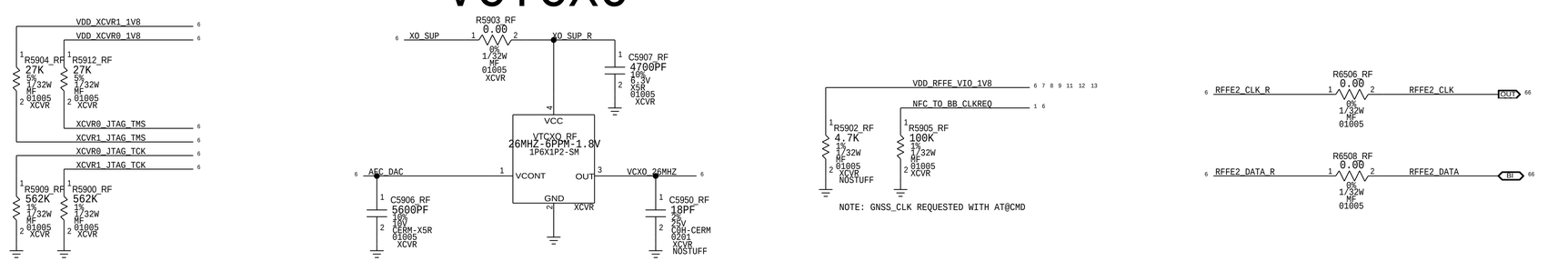

PAGE TITLE	TRANSCEIVERS
Apple Inc.	DRAWING NUMBER 051-00542 SIZE D
	REVISION 5.0.0
NOTICE OF PROPRIETARY PROPERTY: THE INFORMATION CONTAINED HEREIN IS THE PROPRIETARY PROPERTY OF APPLE INC. THE POSESSOR AGREES TO THE FOLLOWING: I TO MAINTAIN THIS DOCUMENT IN CONFIDENCE II NOT TO REPRODUCE OR COPY IT III NOT TO REVEAL OR PUBLISH IT IN WHOLE OR PART IV ALL RIGHTS RESERVED	BRANCH
	PAGE 59 OF 73
	SHEET 59 OF 81

CONFIDENTIAL AND PROPRIETARY APPLE SYSTEM DESIGN. FOR REFERENCE PURPOSE ONLY - NOT A CHANGE REQUEST

ET MODULATOR

ALPES II ES2

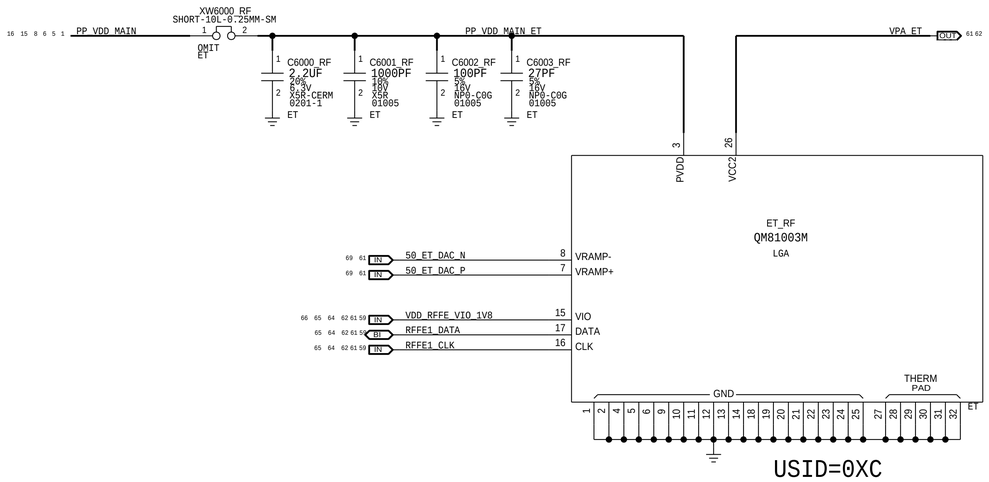

CONFIDENTIAL AND PROPRIETARY APPLE SYSTEM DESIGN. FOR REFERENCE PURPOSE ONLY - NOT A CHANGE REQUEST

PAGE TITLE	ET MODULATOR
Apple Inc.	DRAWING NUMBER 051-00542 SIZE D
	REVISION 5.0.0
NOTICE OF PROPRIETARY PROPERTY:	BRANCH
THE INFORMATION CONTAINED HEREIN IS THE PROPRIETARY PROPERTY OF APPLE INC. THE POSESSOR AGREES TO THE FOLLOWING: I TO MAINTAIN THIS DOCUMENT IN CONFIDENCE II NOT TO REPRODUCE OR COPY IT III NOT TO REVEAL OR PUBLISH IT IN WHOLE OR PART IV ALL RIGHTS RESERVED	PAGE 60 OF 73
	SHEET 60 OF 81

TDD TRANSMIT

2G PA

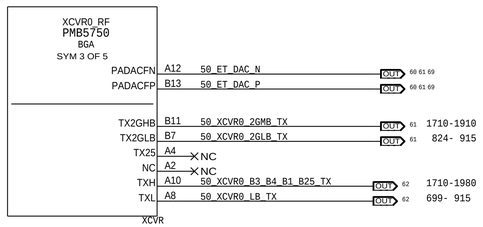

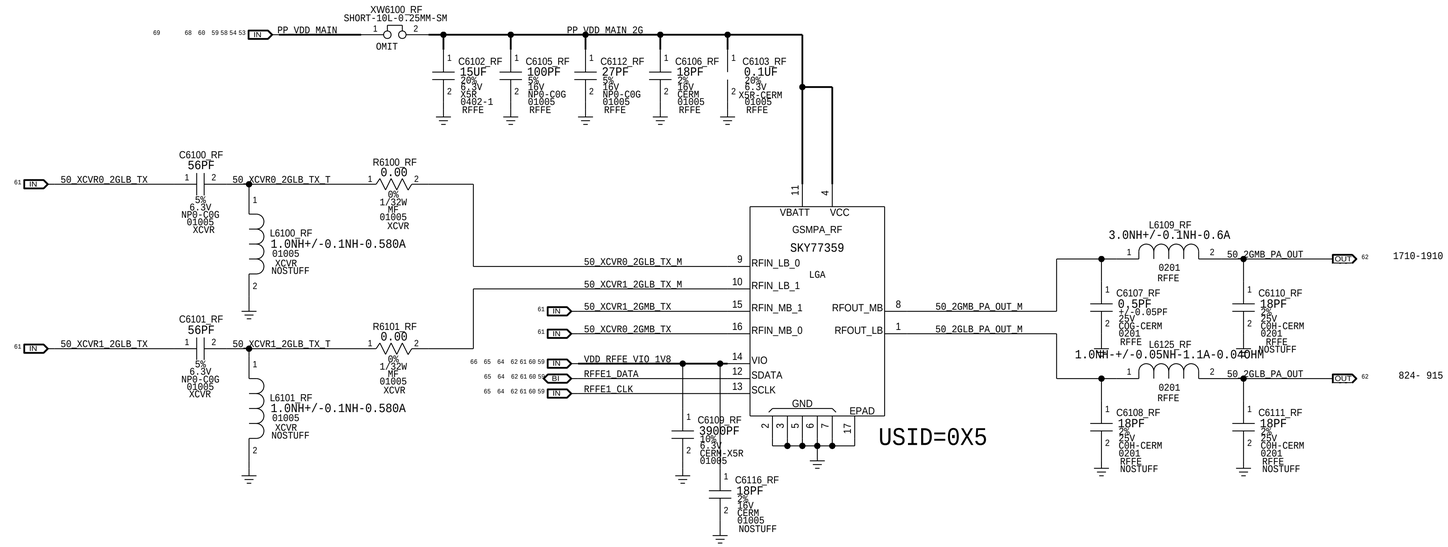

MB HB TDD S-PAD

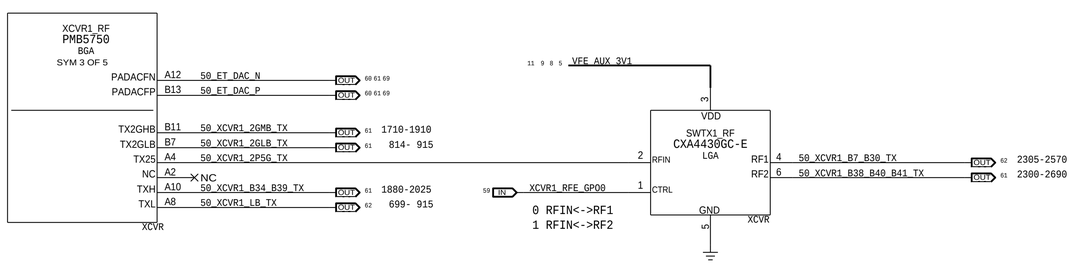

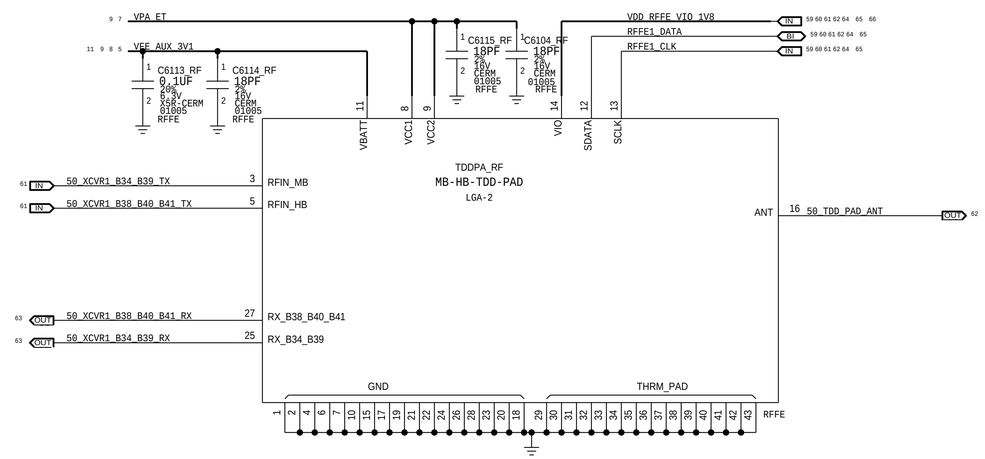

PAGE TITLE	TDD TRANSMIT
Apple Inc.	DRAWING NUMBER 051-00542 SIZE D
	REVISION 5.0.0
NOTICE OF PROPRIETARY PROPERTY:	BRANCH
THE INFORMATION CONTAINED HEREIN IS THE PROPRIETARY PROPERTY OF APPLE INC. THE POSESSOR AGREES TO THE FOLLOWING: I TO MAINTAIN THIS DOCUMENT IN CONFIDENCE II NOT TO REPRODUCE OR COPY IT III NOT TO REVEAL OR PUBLISH IT IN WHOLE OR PART IV ALL RIGHTS RESERVED	PAGE 61 OF 73
	SHEET 61 OF 81

CONFIDENTIAL AND PROPRIETARY APPLE SYSTEM DESIGN. FOR REFERENCE PURPOSE ONLY - NOT A CHANGE REQUEST

FDD TRANSMIT

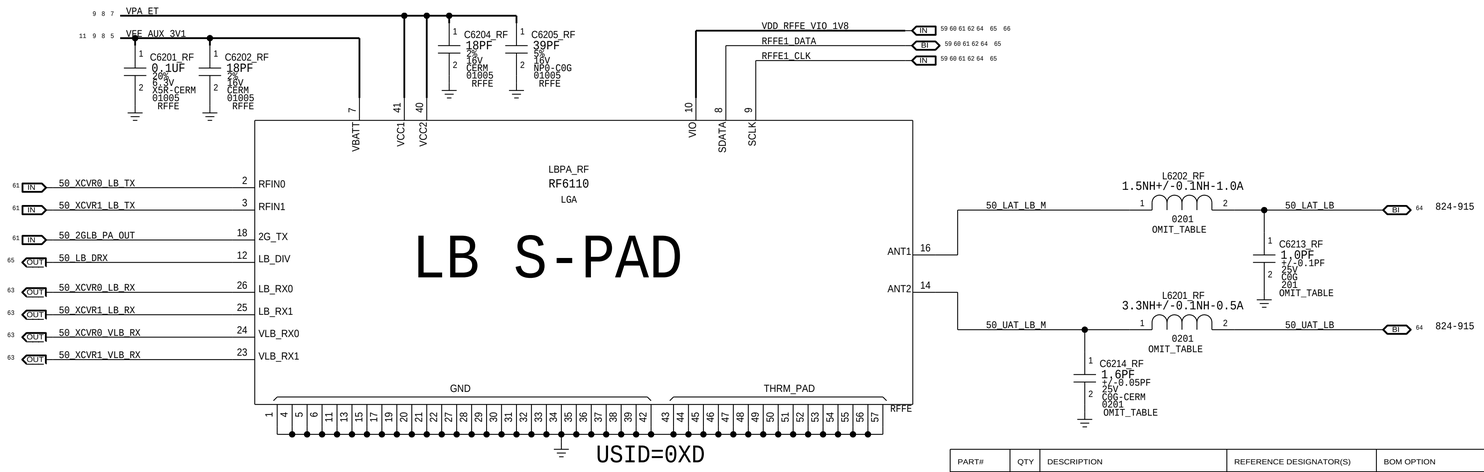

PART#	QTY	DESCRIPTION	REFERENCE DESIGNATOR(S)	BOM OPTION
152S2021	1	IND, 1.5NH, 0201, UH-Q	L6202_RF	D101
131S0278	1	CAP, 1.0PF, 0201, HQ	C6213_RF	D101
152S2004	1	IND, 3.3NH, 0201, UH-Q	L6201_RF	D101
131S0338	1	CAP, 1.6PF, 0201, HF	C6214_RF	D101
152S00151	1	IND, 0.8NH, 0201, UH-Q	L6202_RF	D111
131S0312	1	CAP, 1.2PF, 0201, HQ	C6213_RF	D111
152S2002	1	IND, 2.7NH, 0201, UH-Q	L6201_RF	D111
131S0338	1	CAP, 1.6PF, 0201, HF	C6214_RF	D111

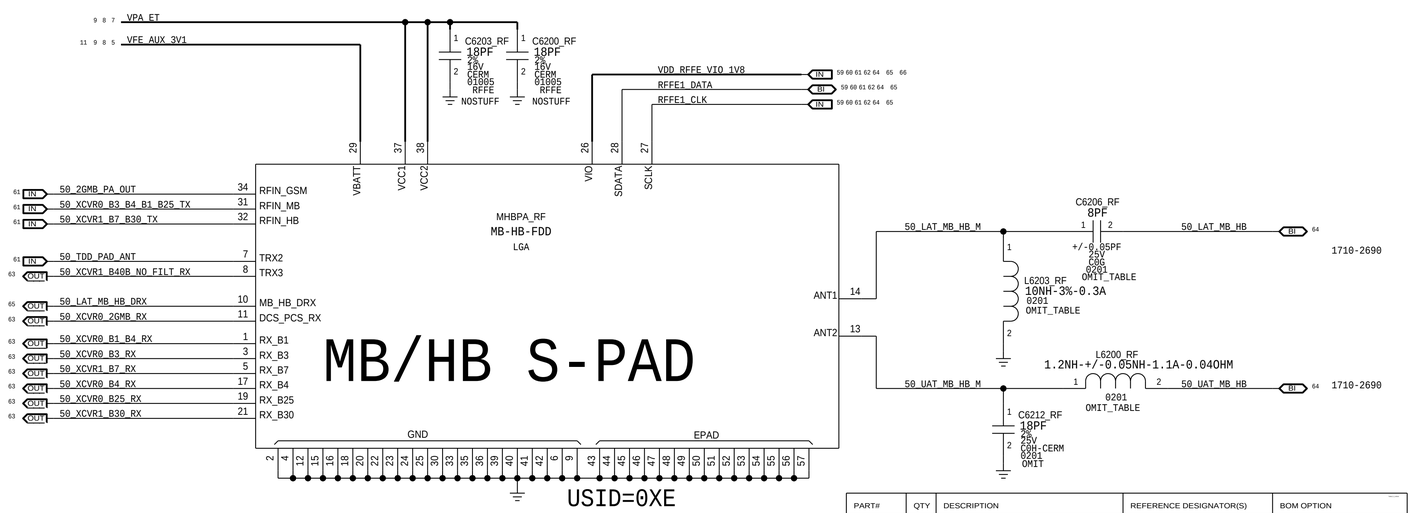

PART#	QTY	DESCRIPTION	REFERENCE DESIGNATOR(S)	BOM OPTION
131S00068	1	CAP, 8.0PF, 0201, HQ	C6206_RF	D101
152S2041	1	IND, 10NH, 0201, UH-Q	L6203_RF	D101
152S00157	1	IND, 1.2NH, 0201, UH-Q	L6200_RF	D101
		NOSTUFF	C6212_RF	D101
131S00068	1	CAP, 8.0PF, 0201, HQ	C6206_RF	D111
152S00020	1	IND, 12NH, 0201, UH-Q	L6203_RF	D111
152S2021	1	IND, 1.5NH, 0201, UH-Q	L6200_RF	D111
		NOSTUFF	C6212_RF	D111

PAGE TITLE: FDD TRANSMIT

Apple Inc.

DRAWING NUMBER: 051-00542 SIZE: D

REVISION: 5.0.0

BRANCH

PAGE: 62 OF 73

SHEET: 62 OF 81

NOTICE OF PROPRIETARY PROPERTY:
THE INFORMATION CONTAINED HEREIN IS THE PROPRIETARY PROPERTY OF APPLE INC.
THE POSESSOR AGREES TO THE FOLLOWING:
I TO MAINTAIN THIS DOCUMENT IN CONFIDENCE
II NOT TO REPRODUCE OR COPY IT
III NOT TO REVEAL OR PUBLISH IT IN WHOLE OR PART
IV ALL RIGHTS RESERVED

CONFIDENTIAL AND PROPRIETARY APPLE SYSTEM DESIGN. FOR REFERENCE PURPOSE ONLY - NOT A CHANGE REQUEST

PRIMARY RECIEVE

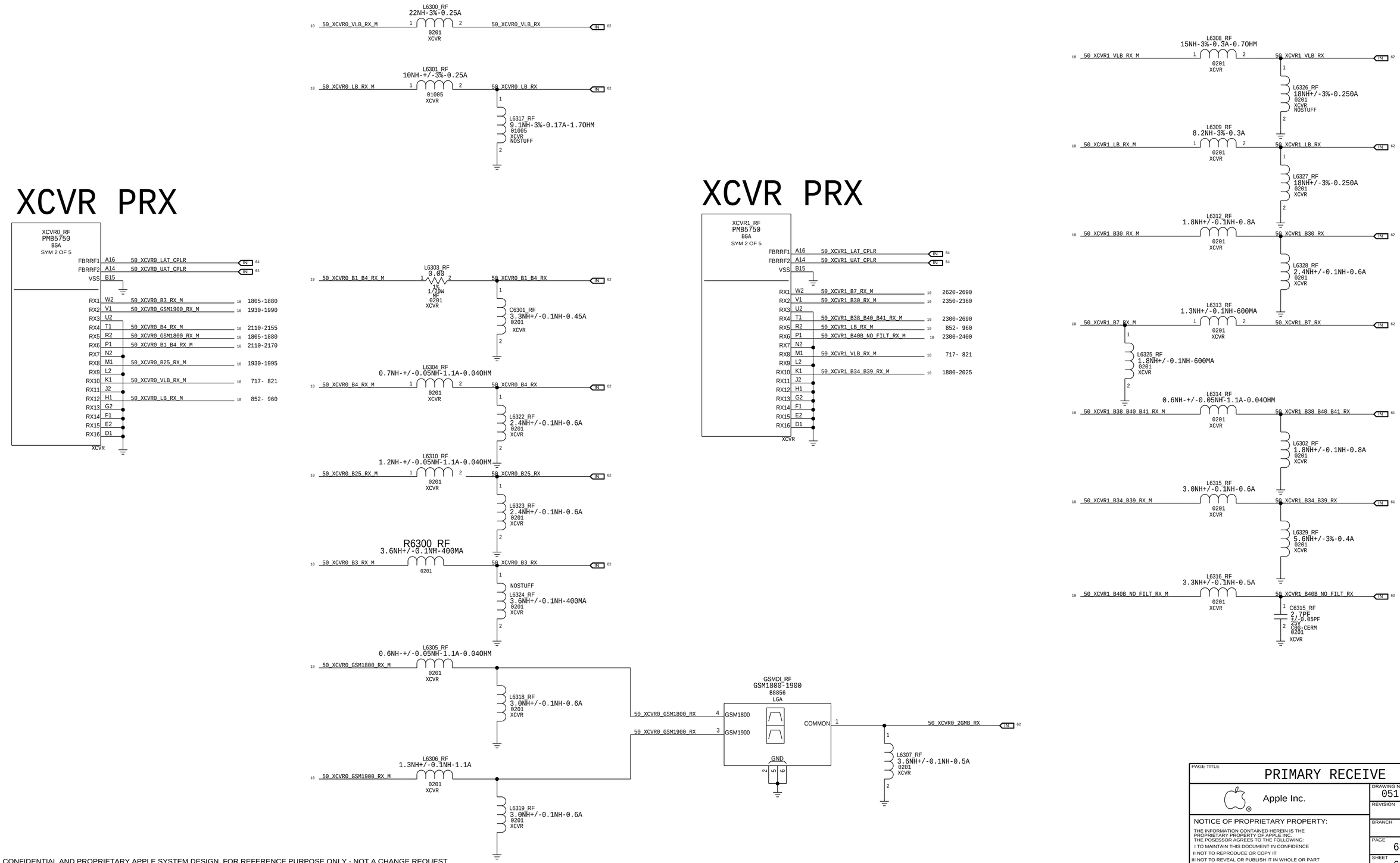

CONFIDENTIAL AND PROPRIETARY APPLE SYSTEM DESIGN. FOR REFERENCE PURPOSE ONLY - NOT A CHANGE REQUEST

PAGE TITLE	PRIMARY RECEIVE
Apple Inc.	DRAWING NUMBER 051-00542 SIZE D
	REVISION 5.0.0
	BRANCH
	PAGE 63 OF 73
	SHEET 63 OF 81

NOTICE OF PROPRIETARY PROPERTY:
THE INFORMATION CONTAINED HEREIN IS THE PROPRIETARY PROPERTY OF APPLE INC.
THE POSESSOR AGREES TO THE FOLLOWING:
I TO MAINTAIN THIS DOCUMENT IN CONFIDENCE
II NOT TO REPRODUCE OR COPY IT
III NOT TO REVEAL OR PUBLISH IT IN WHOLE OR PART
IV ALL RIGHTS RESERVED

LOWER ANTENNA AND COUPLER

LOWER ANTENNA COUPLER

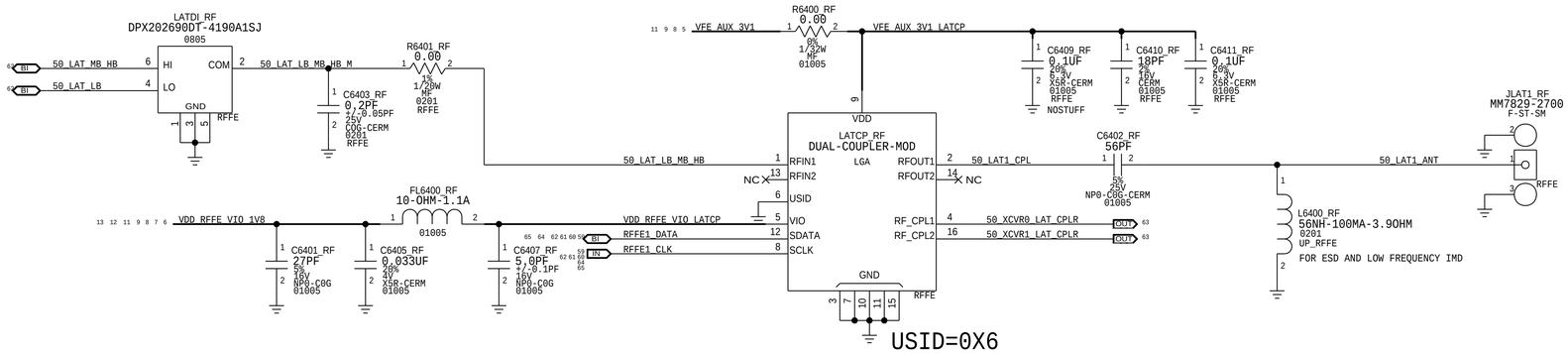

UPPER ANTENNA COUPLER

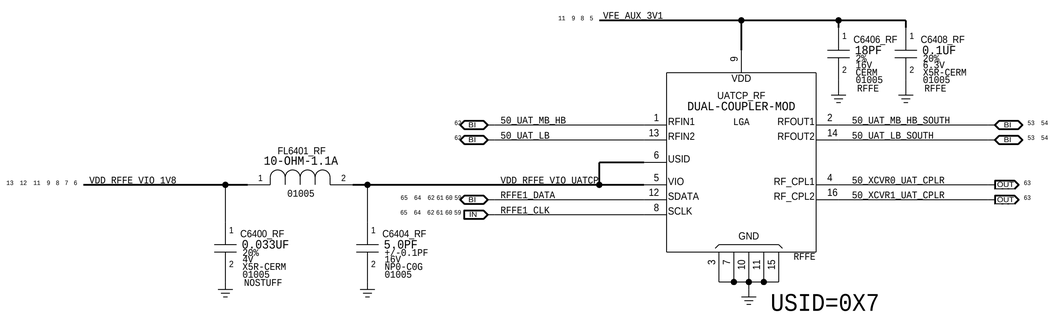

TUNER GPO

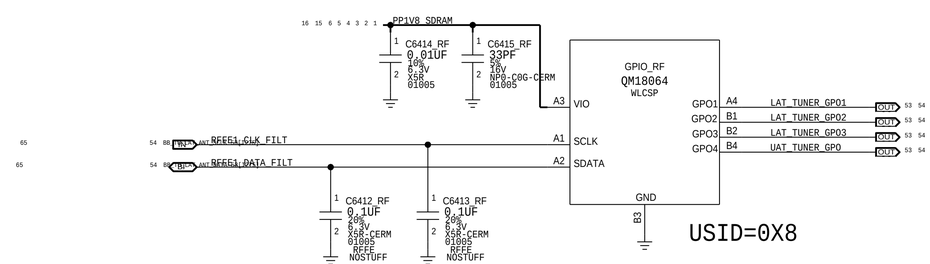

PAGE TITLE	LOWER ANTENNA & COUPLERS
Apple Inc.	DRAWING NUMBER 051-00542 SIZE D
	REVISION 5.0.0
NOTICE OF PROPRIETARY PROPERTY: THE INFORMATION CONTAINED HEREIN IS THE PROPRIETARY PROPERTY OF APPLE INC. THE POSESSOR AGREES TO THE FOLLOWING: I TO MAINTAIN THIS DOCUMENT IN CONFIDENCE II NOT TO REPRODUCE OR COPY IT III NOT TO REVEAL OR PUBLISH IT IN WHOLE OR PART IV ALL RIGHTS RESERVED	BRANCH
	PAGE 64 OF 73
	SHEET 64 OF 81

CONFIDENTIAL AND PROPRIETARY APPLE SYSTEM DESIGN. FOR REFERENCE PURPOSE ONLY - NOT A CHANGE REQUEST

DIVERSITY RECEIVE ASM'S

LB DRX ASM

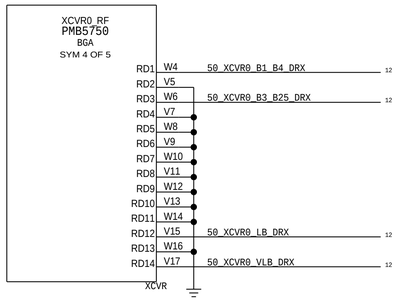

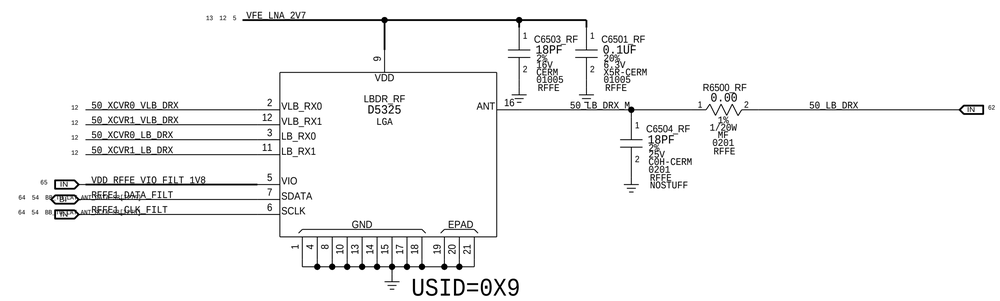

MB HB DRX ASM

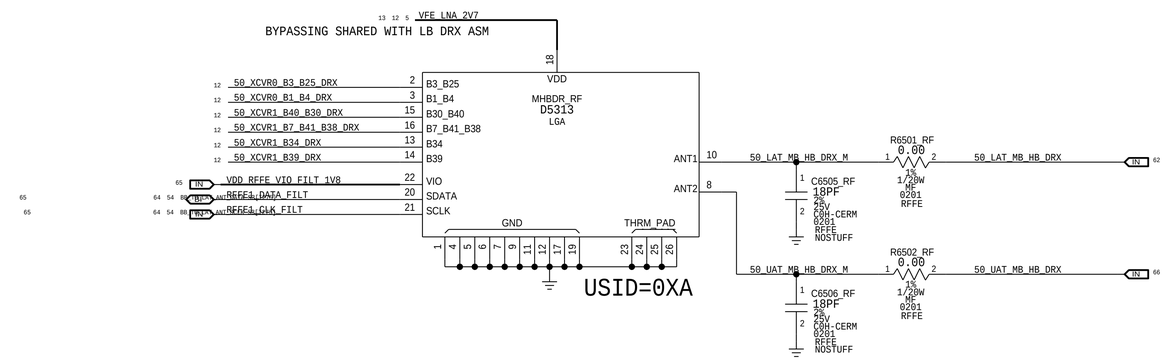

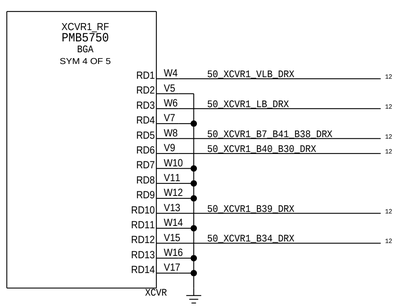

RFFE FILTERING

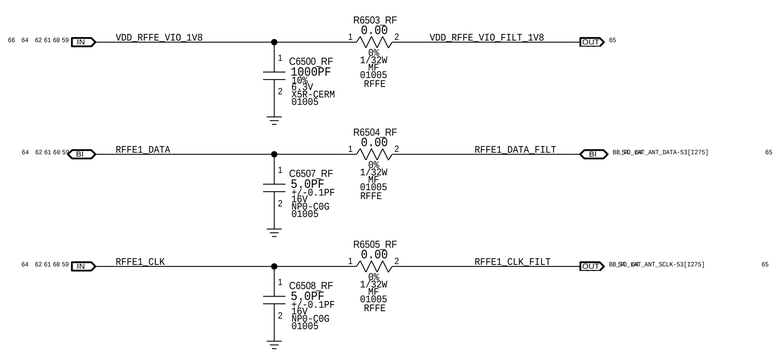

CONFIDENTIAL AND PROPRIETARY APPLE SYSTEM DESIGN. FOR REFERENCE PURPOSE ONLY - NOT A CHANGE REQUEST

PAGE TITLE: DIVERSITY RECEIVE ASM'S

Apple Inc.

DRAWING NUMBER: 051-00542 | SIZE: D

REVISION: 5.0.0

BRANCH:

PAGE: 65 OF 73

SHEET: 65 OF 81

NOTICE OF PROPRIETARY PROPERTY:
THE INFORMATION CONTAINED HEREIN IS THE PROPRIETARY PROPERTY OF APPLE INC.
THE POSESSOR AGREES TO THE FOLLOWING:
I TO MAINTAIN THIS DOCUMENT IN CONFIDENCE
II NOT TO REPRODUCE OR COPY IT
III NOT TO REVEAL OR PUBLISH IT IN WHOLE OR PART
IV ALL RIGHTS RESERVED

DIVERSITY RECEIVE LNAS

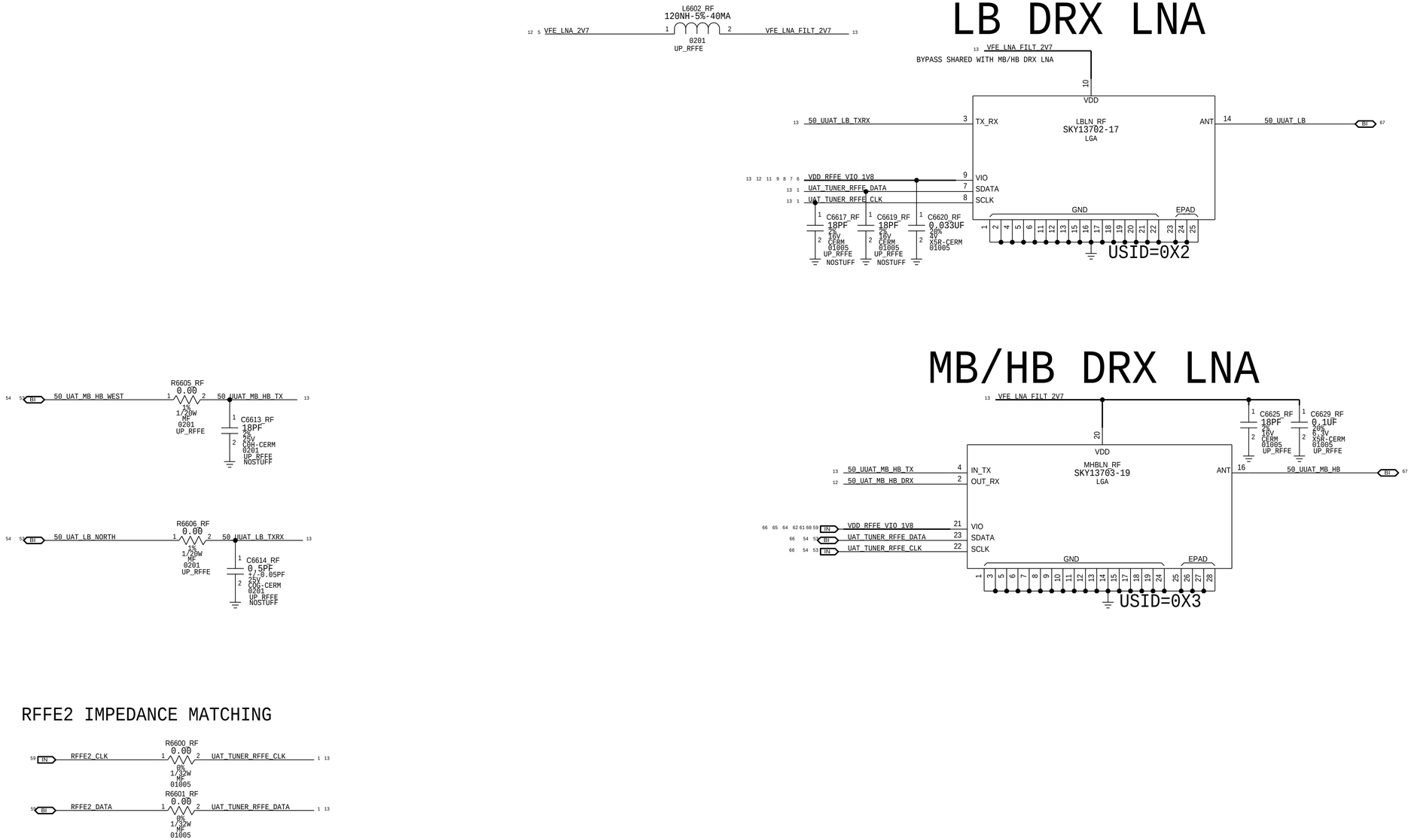

CONFIDENTIAL AND PROPRIETARY APPLE SYSTEM DESIGN. FOR REFERENCE PURPOSE ONLY - NOT A CHANGE REQUEST

PAGE TITLE: DIVERSITY RECEIVE LNA'S

Apple Inc.

DRAWING NUMBER: 051-00542 | SIZE: D

REVISION: 5.0.0

BRANCH:

PAGE: 66 OF 73

SHEET: 66 OF 81

NOTICE OF PROPRIETARY PROPERTY:
THE INFORMATION CONTAINED HEREIN IS THE PROPRIETARY PROPERTY OF APPLE INC.
THE POSESSOR AGREES TO THE FOLLOWING:
I TO MAINTAIN THIS DOCUMENT IN CONFIDENCE
II NOT TO REPRODUCE OR COPY IT
III NOT TO REVEAL OR PUBLISH IT IN WHOLE OR PART
IV ALL RIGHTS RESERVED

UPPER ANTENNA FEEDS

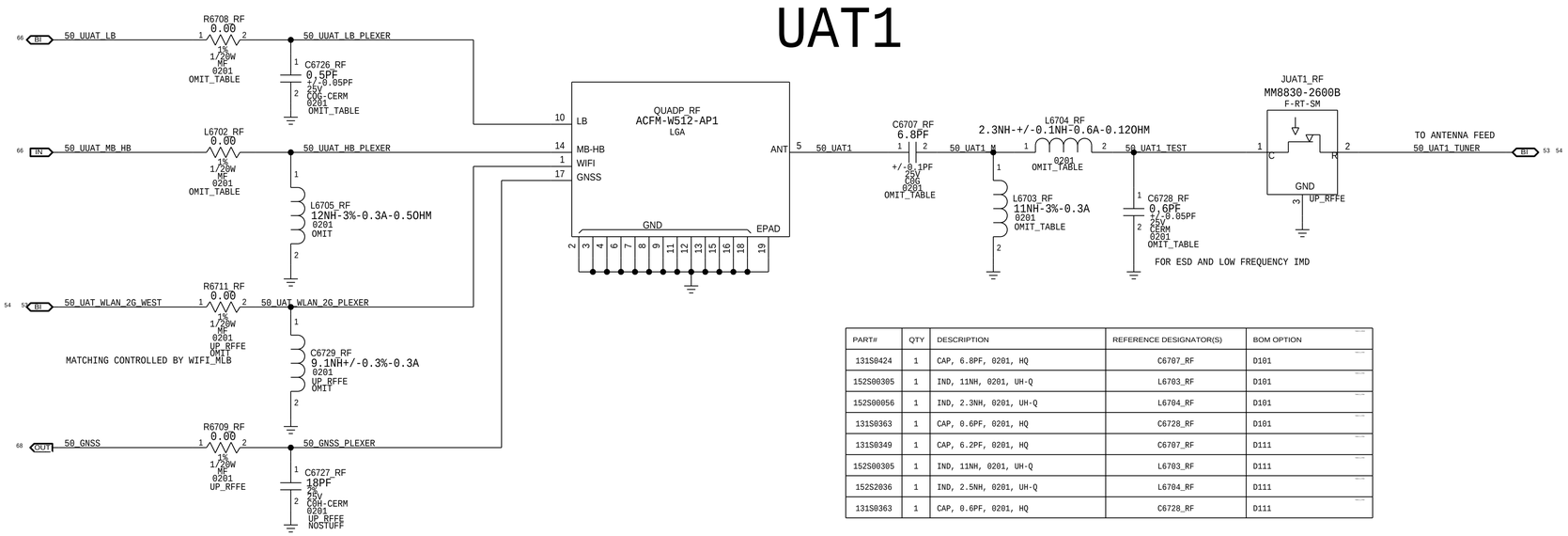

PART#	QTY	DESCRIPTION	REFERENCE DESIGNATOR(S)	BOM OPTION
131S0424	1	CAP, 6.8PF, 0201, HQ	C6707_RF	D101
152S00305	1	IND, 11NH, 0201, UH-Q	L6703_RF	D101
152S00056	1	IND, 2.3NH, 0201, UH-Q	L6704_RF	D101
131S0363	1	CAP, 0.6PF, 0201, HQ	C6728_RF	D101
131S0349	1	CAP, 6.2PF, 0201, HQ	C6707_RF	D111
152S00305	1	IND, 11NH, 0201, UH-Q	L6703_RF	D111
152S2036	1	IND, 2.5NH, 0201, UH-Q	L6704_RF	D111
131S0363	1	CAP, 0.6PF, 0201, HQ	C6728_RF	D111

PART#	QTY	DESCRIPTION	REFERENCE DESIGNATOR(S)	BOM OPTION
118S0724	1	RES, 00HM, 0201	R6708_RF	D101
131S0425	1	CAP, 0.5PF, 0201, HQ	C6726_RF	D101
118S0724	1	RES, 00HM, 0201	L6702_RF	D101
152S00020	1	IND, 12NH, 0201, UH-Q	L6705_RF	D101
118S0724	1	RES, 00HM, 0201	R6708_RF	D111
131S0425	1	CAP, 0.5PF, 0201, HQ	C6726_RF	D111
118S0724	1	RES, 00HM, 0201	L6702_RF	D111
152S00020	1	IND, 12NH, 0201, UH-Q	L6705_RF	D111

CONFIDENTIAL AND PROPRIETARY APPLE SYSTEM DESIGN. FOR REFERENCE PURPOSE ONLY - NOT A CHANGE REQUEST

PAGE TITLE: UPPER ANTENNA FEEDS

Apple Inc.

DRAWING NUMBER: 051-00542 SIZE: D

REVISION: 5.0.0

BRANCH

PAGE: 67 OF 73

SHEET: 67 OF 81

NOTICE OF PROPRIETARY PROPERTY:
THE INFORMATION CONTAINED HEREIN IS THE PROPRIETARY PROPERTY OF APPLE INC.
THE POSESSOR AGREES TO THE FOLLOWING:
I TO MAINTAIN THIS DOCUMENT IN CONFIDENCE
II NOT TO REPRODUCE OR COPY IT
III NOT TO REVEAL OR PUBLISH IT IN WHOLE OR PART
IV ALL RIGHTS RESERVED

GNSS LNA + RECEIVER

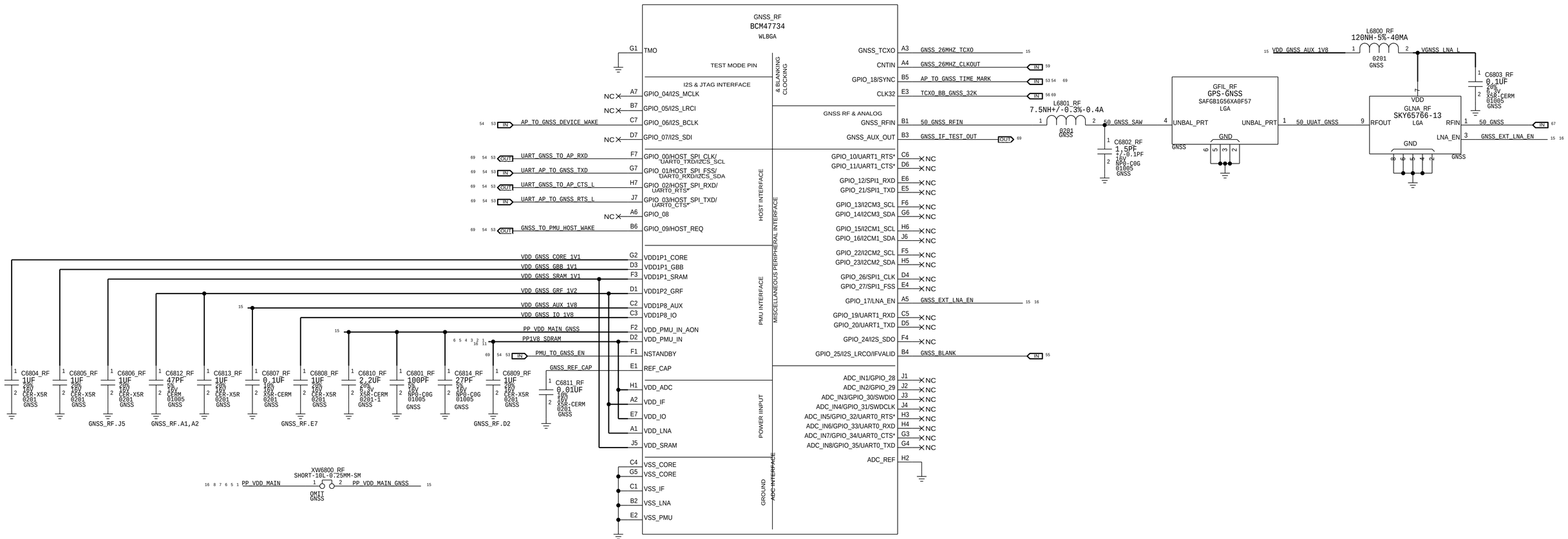

TCXO

KEEP AWAY FROM HEAT SOURCES

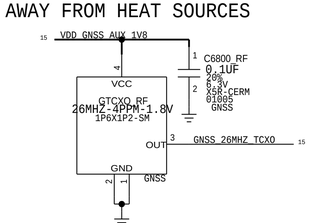

PAGE TITLE	GNSS
Apple Inc.	DRAWING NUMBER 051-00542 SIZE D
	REVISION 5.0.0
NOTICE OF PROPRIETARY PROPERTY: THE INFORMATION CONTAINED HEREIN IS THE PROPRIETARY PROPERTY OF APPLE INC. THE POSESSOR AGREES TO THE FOLLOWING: I TO MAINTAIN THIS DOCUMENT IN CONFIDENCE II NOT TO REPRODUCE OR COPY IT III NOT TO REVEAL OR PUBLISH IT IN WHOLE OR PART IV ALL RIGHTS RESERVED	BRANCH
	PAGE 68 OF 73
	SHEET 68 OF 81

CONFIDENTIAL AND PROPRIETARY APPLE SYSTEM DESIGN. FOR REFERENCE PURPOSE ONLY - NOT A CHANGE REQUEST

MLB TEST POINTS

BASEBAND

PP6901_RF P2MM-NSM SM 1 AP_TO_BBPMU_SDWN_L 1 2 5 OMIT
PP6903_RF P2MM-NSM SM 1 BBPMU_PWRGOOD 3 5 6 OMIT
PP6904_RF P2MM-NSM SM 1 BBPMU_XG_RESET_L 3 5 OMIT
PP6905_RF P2MM-NSM SM 1 BBPMU_XG_RESET_SD_L 3 5 OMIT
PP6906_RF P2MM-NSM SM 1 TCXO_BB_GNSS_32K 3 15 OMIT
PP6909_RF P2MM-NSM SM 1 BB_DEBUG_ERROR 2 OMIT
PP6961_RF P2MM-NSM SM 1 AP_TO_BB_MESA_ON 1 2 OMIT
PP6962_RF P2MM-NSM SM 1 BB_TO_AP_GSM_TXBURST 1 2 OMIT
PP6963_RF P2MM-NSM SM 1 AP_TO_BB_TIME_MARK 1 2 OMIT

XCVR

PP6931_RF P2MM-NSM SM 1 SYSCLK_26MHZ 2 6 OMIT

ETIC

PP6932_RF P2MM-NSM SM 1 50_ET_DAC_P 7 8 OMIT
PP6933_RF P2MM-NSM SM 1 50_ET_DAC_N 7 8 OMIT

GNSS

PP6937_RF P2MM-NSM SM 1 GNSS_EXT_LNA_EN 15 OMIT
PP6936_RF P2MM-NSM SM 1 PMU_TO_GNSS_EN 1 15 OMIT
PP6938_RF P2MM-NSM SM 1 UART_GNSS_TO_AP_RXD 1 15 OMIT
PP6939_RF P2MM-NSM SM 1 UART_AP_TO_GNSS_TXD 1 15 OMIT
PP6964_RF P2MM-NSM SM 1 UART_GNSS_TO_AP_CTS_L 1 15 OMIT
PP6965_RF P2MM-NSM SM 1 UART_AP_TO_GNSS_RTS_L 1 15 OMIT
PP6966_RF P2MM-NSM SM 1 AP_TO_GNSS_TIME_MARK 1 15 OMIT
PP6940_RF P2MM-NSM SM 1 GNSS_IF_TEST_OUT 15 OMIT
PP6945_RF P2MM-NSM SM 1 GNSS_TO_PMU_HOST_WAKE 1 15 OMIT

BBPMU

PP6935_RF P2MM-NSM SM 1 BBPMU_VCLK 2 5 OMIT
PP6954_RF P2MM-NSM SM 1 BBPMU_VDIO 2 5 OMIT

PCIE

PP6915_RF P2MM-NSM SM 1 100_PCIE_AP_TO_BB_TX_P 1 2 OMIT
PP6916_RF P2MM-NSM SM 1 100_PCIE_AP_TO_BB_TX_N 1 2 OMIT
PP6918_RF P2MM-NSM SM 1 100_PCIE_BB_TO_AP_RX_N 1 2 OMIT
PP6919_RF P2MM-NSM SM 1 PCIE_AP_TO_BB_PERST_L 1 2 16 OMIT
PP6920_RF P2MM-NSM SM 1 PCIE_AP_BI_BB_CLKREQ_L 1 2 OMIT
PP6921_RF P2MM-NSM SM 1 PCIE_BB_TO_PMU_WAKE_L 1 2 OMIT

DIGRF

PP6950_RF P2MM-NSM SM 1 90_DIGRF_M1_TX_P 2 6 OMIT
PP6951_RF P2MM-NSM SM 1 90_DIGRF_M1_TX_N 2 6 OMIT
PP6952_RF P2MM-NSM SM 1 90_DIGRF_A1_RX1_P 2 6 OMIT
PP6953_RF P2MM-NSM SM 1 90_DIGRF_A1_RX1_N 2 6 OMIT

PCIE GND

PP6948_RF P2MM-NSM SM 1 OMIT
PP6949_RF P2MM-NSM SM 1 OMIT

SIM CARD CONNECTOR

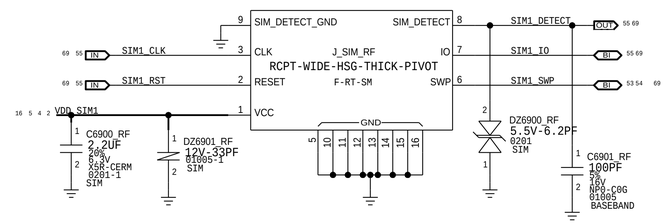

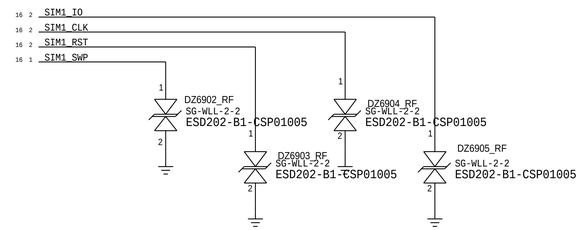

HARDWARE ID

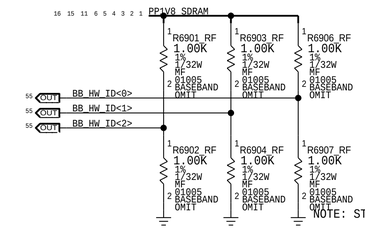

DEV CONFIG

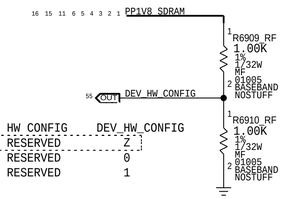

HW CONFIG	DEV_HW_CONFIG
RESERVED	Z
RESERVED	0
RESERVED	1

NOTE: STUFFING FOR HWID IS IN RADIO_MLB_FF SUB-DESIGN

HARDWARE	HW_ID<2:0>	HARDWARE	HW_ID<2:0>	HARDWARE	HW_ID<2:0>
RF DEV2	0 0 Z	ICE16 PROTO0	0 0 0	ICE16.1 PROTO1	Z Z 1
RF DEV2.1	0 Z 0	ICE16 PROTO0 ES2	0 0 1	ICE16.1 PROTO2	Z 1 Z
RF DEV3	0 Z Z	ICE16 PROTO1	0 1 0	ICE16.1 EVT	Z 1 1
RF DEV4	Z 0 0	ICE16 PROTO2	0 1 1	ICE16.2 EVT	1 Z Z
RF DEV4.1	Z 0 Z	ICE16 PROTO2 ES2.2	1 0 0	ICE16.1 EVT2	1 Z 1
RF DEV4.2	Z Z 0	ICE16 EVT	1 0 1	ICE16.2 EVT2	1 1 Z
RF DEV5	Z Z Z	ICE16 EVT2 CARRIER	1 1 0	ICE16.1 DVT/PVT	0 1 Z
RF DEV5.1	0 Z 1	ICE16 DVT/PVT	1 1 1	ICE16.2 DVT/PVT	Z 0 1

BOOTCFG

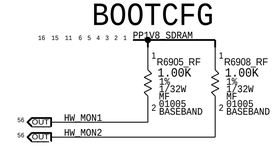

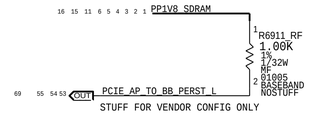

STUFF FOR VENDOR CONFIG ONLY

	HW_MON1	HW_MON2	TRIG_IN
NAND	0	0	1
FLASHLESS	1	0	1
FLASHLESS WDOG DIS	1	1	0
NAND	1	1	1

BOOTSTRAPS ARE INTERNALLY PULLED DOWN

DEBUG CONNECTOR

MLB 516S1185
FLEX 516S1184

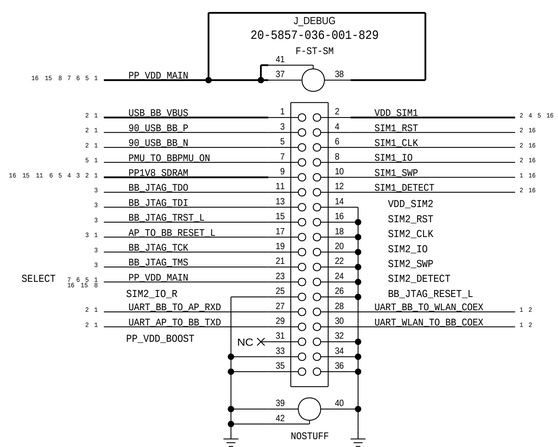

PAGE TITLE	TEST POINTS & SIM
Apple Inc.	DRAWING NUMBER 051-00542 SIZE D
	REVISION 5.0.0
	BRANCH
	PAGE 69 OF 73
	SHEET 69 OF 81

NOTICE OF PROPRIETARY PROPERTY:
THE INFORMATION CONTAINED HEREIN IS THE PROPRIETARY PROPERTY OF APPLE INC.
THE POSESSOR AGREES TO THE FOLLOWING:
I TO MAINTAIN THIS DOCUMENT IN CONFIDENCE
II NOT TO REPRODUCE OR COPY IT
III NOT TO REVEAL OR PUBLISH IT IN WHOLE OR PART
IV ALL RIGHTS RESERVED

CONFIDENTIAL AND PROPRIETARY APPLE SYSTEM DESIGN. FOR REFERENCE PURPOSE ONLY - NOT A CHANGE REQUEST

8 7 6 5 4 3 2 1

D C B A

8 7 6 5 4 3 2 1

8 7 6 5 4 3 2 1

D C B A

8 7 6 5 4 3 2 1

8 7 6 5 4 3 2 1

D C B A

8 7 6 5 4 3 2 1

8 7 6 5 4 3 2 1

D C B A

8 7 6 5 4 3 2 1

1. ALL RESISTANCE VALUES ARE IN OHMS, 0.1 WATT +/- 5%.
2. ALL CAPACITANCE VALUES ARE IN MICROFARADS.
3. ALL CRYSTALS & OSCILLATOR VALUES ARE IN HERTZ.

REV	ECN	DESCRIPTION OF REVISION	CK APPD / DATE
5	0006232160	ENGINEERING RELEASED	2016-05-16

STOCKHOLM_MLB
APRIL 11, 2016

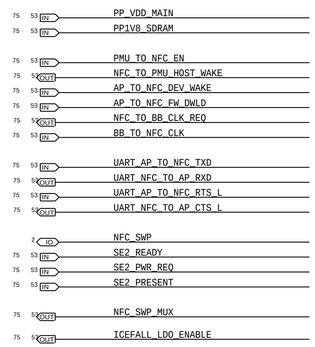

ALTERNATES

PART NUMBER	ALTERNATE FOR PART NUMBER	REFERENCE DESIGNATOR(S)	DESCRIPTION	BOM OPTION
132S0436	132S0400	C7504_RF	0.22UF 20% 6.3V 01005	?

BOM OPTIONS

PART#	QTY	DESCRIPTION	REFERENCE DESIGNATOR(S)	BOM OPTION
131S0883	1	220PF, 0201 2% 50V	C7514_RF	D101
131S00055	1	22PF, 0201 2% 50V	C7512_RF	D101
131S00117	1	120PF, 0201 2% 50V	C7518_RF	D101
131S00026	1	820PF, 0201 2% 50V	C7516_RF	D101
131S0883	1	220PF, 0201 2% 50V	C7514_RF	D10_JP
131S00055	1	22PF, 0201 2% 50V	C7512_RF	D10_JP
131S00017	1	47PF, 0201 2% 50V	C7518_RF	D10_JP
131S0825	1	560PF, 0201 2% 50V	C7516_RF	D10_JP
131S0883	1	220PF, 0201 2% 50V	C7514_RF	D10_ROW
131S00055	1	22PF, 0201 2% 50V	C7512_RF	D10_ROW
131S00117	1	120PF, 0201 2% 50V	C7518_RF	D10_ROW
131S00026	1	820PF, 0201 2% 50V	C7516_RF	D10_ROW

PART#	QTY	DESCRIPTION	REFERENCE DESIGNATOR(S)	BOM OPTION
131S00081	1	270PF, 0201 2% 25V	C7514_RF	D111
131S0883	1	220PF, 0201 2% 50V	C7518_RF	D111
131S00026	1	820PF, 0201 2% 50V	C7516_RF	D111
131S00081	1	270PF, 0201 2% 25V	C7514_RF	D11_JP
131S0731	1	100PF, 0201 2% 50V	C7518_RF	D11_JP
131S00033	1	680PF, 0201 2% 50V	C7516_RF	D11_JP
131S00081	1	270PF, 0201 2% 25V	C7514_RF	D11_ROW
131S0883	1	220PF, 0201 2% 50V	C7518_RF	D11_ROW
131S00026	1	820PF, 0201 2% 50V	C7516_RF	D11_ROW

page1

DRAWING TITLE
SCH,MLB,D111

Apple Inc.

DRAWING NUMBER 051-00542
SIZE D
REVISION 5.0.0
BRANCH
PAGE 1 OF 75
SHEET 74 OF 81

NOTICE OF PROPRIETARY PROPERTY:
THE INFORMATION CONTAINED HEREIN IS THE PROPRIETARY PROPERTY OF APPLE INC.
THE POSESSOR AGREES TO THE FOLLOWING:
I TO MAINTAIN THIS DOCUMENT IN CONFIDENCE
II NOT TO REPRODUCE OR COPY IT
III NOT TO REVEAL OR PUBLISH IT IN WHOLE OR PART
IV ALL RIGHTS RESERVED

STOCKHOLM

5V BOOSTER

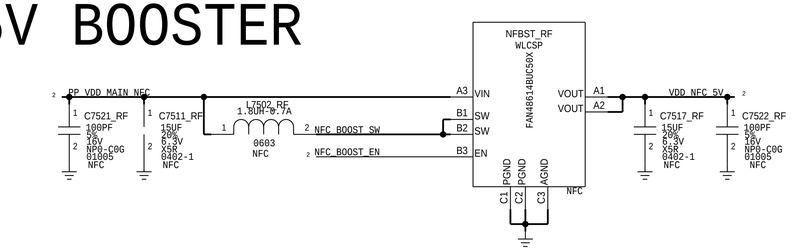

NFC CONTROLLER

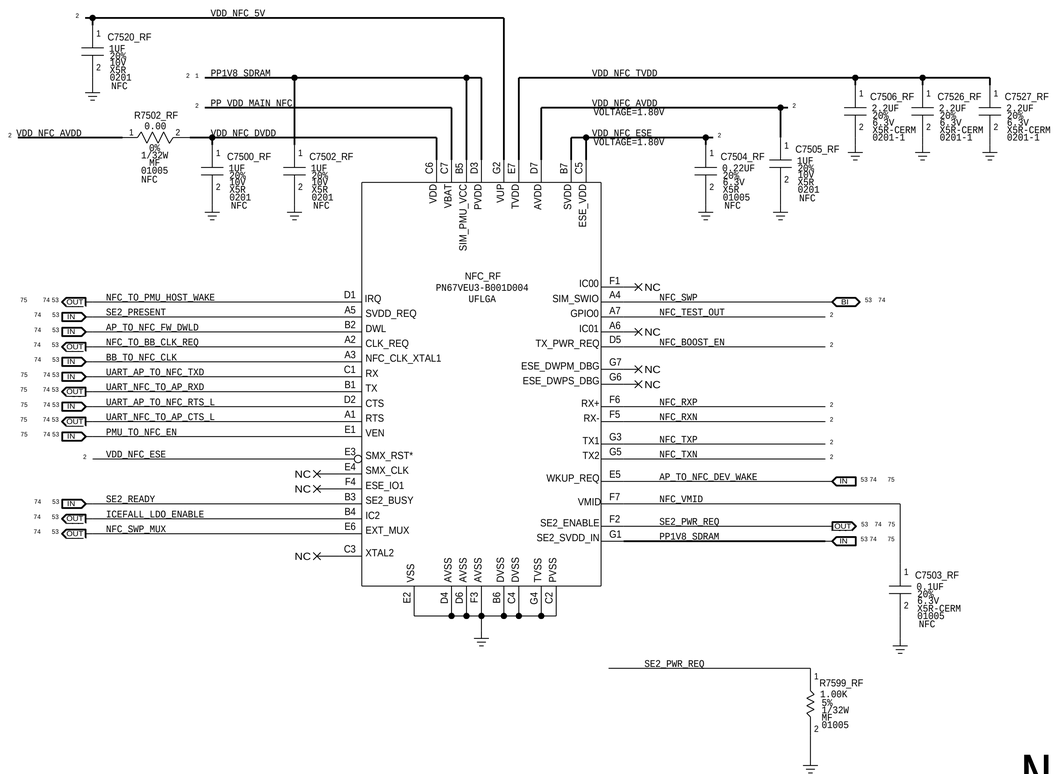

NFC FRONT END

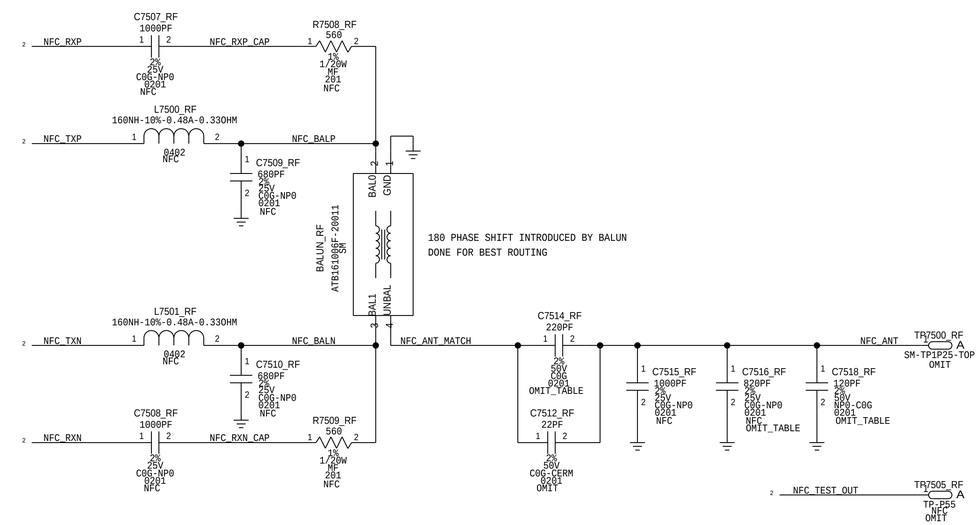

NFC LOAD SWITCH

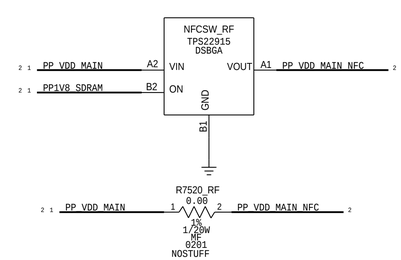

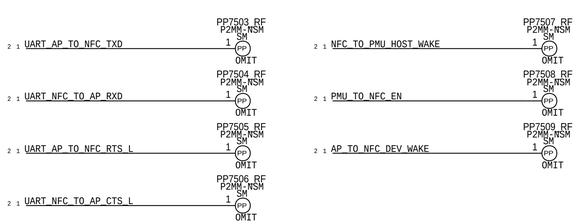

PAGE TITLE	NFC
Apple Inc.	DRAWING NUMBER 051-00542 SIZE D
	REVISION 5.0.0
NOTICE OF PROPRIETARY PROPERTY: THE INFORMATION CONTAINED HEREIN IS THE PROPRIETARY PROPERTY OF APPLE INC. THE POSSESSOR AGREES TO THE FOLLOWING: I TO MAINTAIN THIS DOCUMENT IN CONFIDENCE II NOT TO REPRODUCE OR COPY IT III NOT TO REVEAL OR PUBLISH IT IN WHOLE OR PART IV ALL RIGHTS RESERVED	BRANCH
	PAGE 75 OF 75
	SHEET 75 OF 81

1. ALL RESISTANCE VALUES ARE IN OHMS, 0.1 WATT +/- 5%.
2. ALL CAPACITANCE VALUES ARE IN MICROFARADS.
3. ALL CRYSTALS & OSCILLATOR VALUES ARE IN HERTZ.

REV	ECN	DESCRIPTION OF REVISION	CK APPD / DATE
5	0006232160	ENGINEERING RELEASED	2016-05-16

D111 RADIO_MLB_FF
Mon May 16 17:43:10 2016

PDF PAGE	CONTENTS
2	METROCIRC

SCH: 951-02180
BOM: 939-01837
PCB: 920-XXXXX

?

DRAWING TITLE: SCH,MLB,D111

Apple Inc.

DRAWING NUMBER: 051-00542 SIZE: D
REVISION: 5.0.0
BRANCH:
PAGE: 1 OF 3
SHEET: 76 OF 81

NOTICE OF PROPRIETARY PROPERTY:
THE INFORMATION CONTAINED HEREIN IS THE PROPRIETARY PROPERTY OF APPLE INC.
THE POSESSOR AGREES TO THE FOLLOWING:
I TO MAINTAIN THIS DOCUMENT IN CONFIDENCE
II NOT TO REPRODUCE OR COPY IT
III NOT TO REVEAL OR PUBLISH IT IN WHOLE OR PART
IV ALL RIGHTS RESERVED

CONFIDENTIAL AND PROPRIETARY APPLE SYSTEM DESIGN. FOR REFERENCE PURPOSE ONLY - NOT A CHANGE REQUEST

METROCIRC

D111 NORTH-SOUTH METROCIRC 339S00147

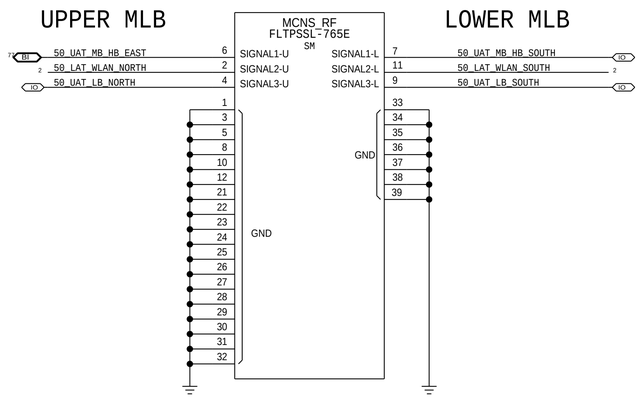

D111 EAST-WEST METROCIRC 339S00146

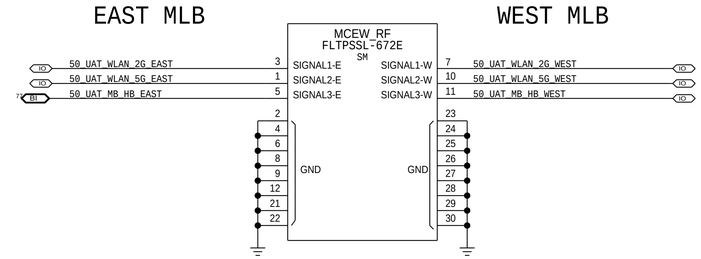

WIFI LOWER ANTENNA FEED

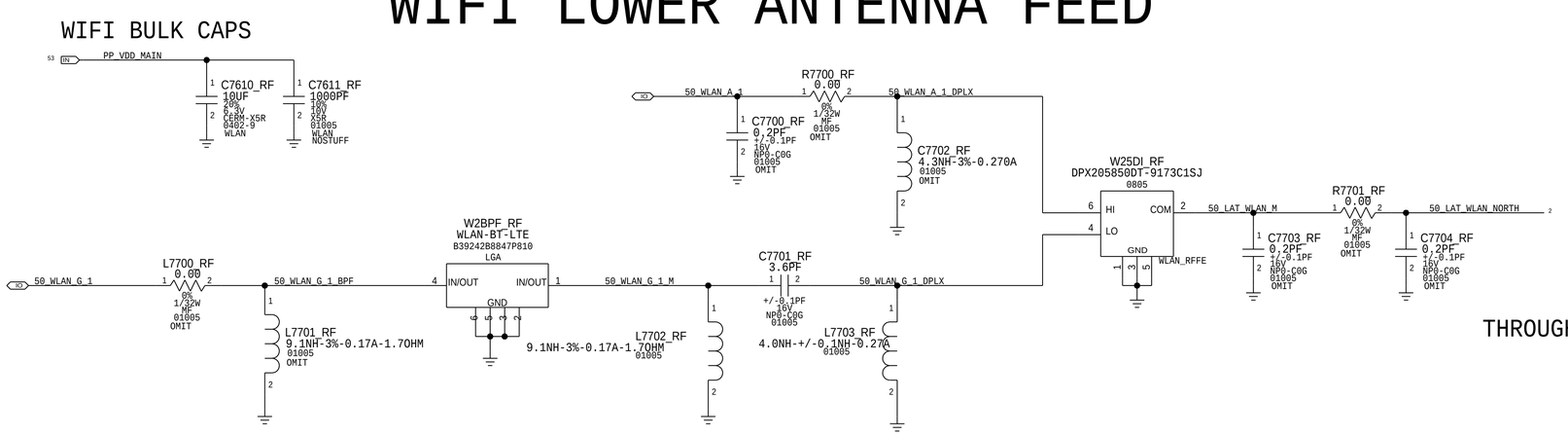

COAX

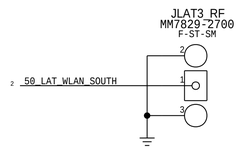

THROUGH METROCIRC

MATCHING CONTROLLED BY WIFI_MLB

ICE16.1/2 EVT2

PART#	QTY	DESCRIPTION	REFERENCE DESIGNATOR(S)	BOM OPTION
11850608	2	RES, MF, 1K OHM, 1%, 1/32W, 01005	R6901_RF, R6906_RF	

PAGE TITLE: METROCIRC

Apple Inc.

DRAWING NUMBER: 051-00542 SIZE: D

REVISION: 5.0.0

BRANCH:

PAGE: 2 OF 3

SHEET: 77 OF 81

NOTICE OF PROPRIETARY PROPERTY:
THE INFORMATION CONTAINED HEREIN IS THE PROPRIETARY PROPERTY OF APPLE INC.
THE POSESSOR AGREES TO THE FOLLOWING:
I TO MAINTAIN THIS DOCUMENT IN CONFIDENCE
II NOT TO REPRODUCE OR COPY IT
III NOT TO REVEAL OR PUBLISH IT IN WHOLE OR PART
IV ALL RIGHTS RESERVED

UAT TUNER FLEX

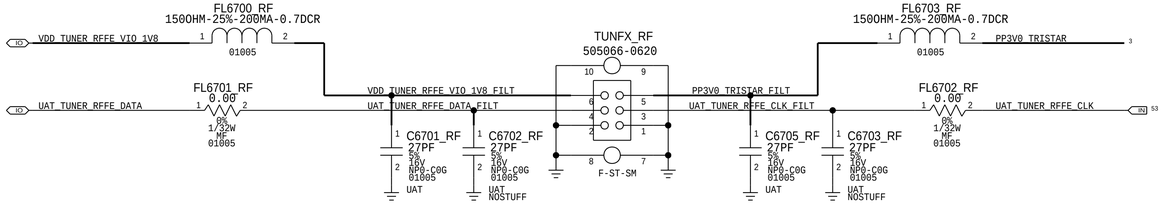

PINOUT IS ROTATED 180 COMPARED TO D101

ALTERNATES

PART NUMBER	ALTERNATE FOR PART NUMBER	BOM OPTION	REF DES	COMMENTS:
152S00482	152S00490	ALTERNATE	L8007_RF	MURATA LQW03CAR56J00

ALT UAT1 GND

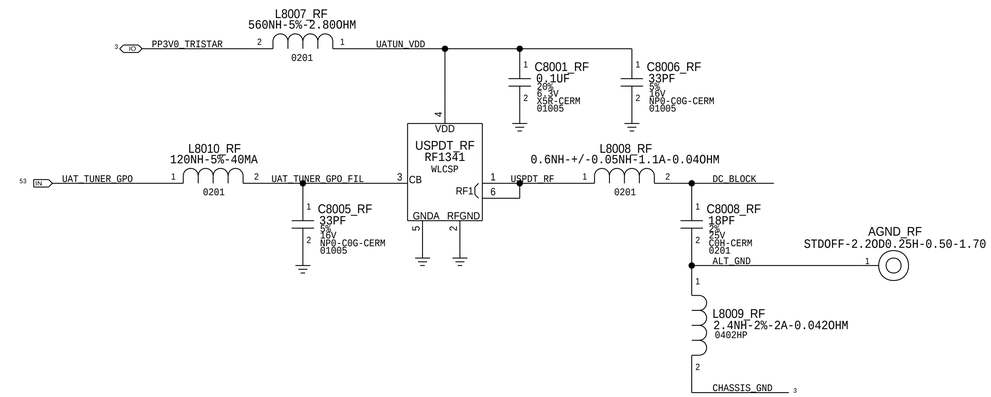

UAT TUNER

REMOVED

USID=0XC

LB/MLB/GNSS/MB/HB STANDOFF

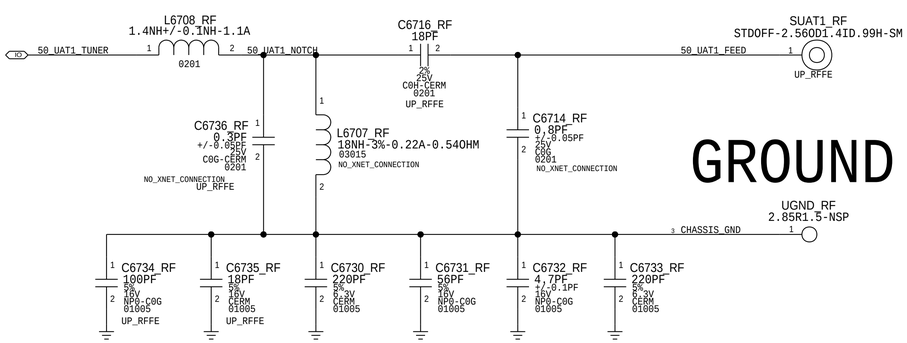

GROUND RING

5G WIFI STANDOFF

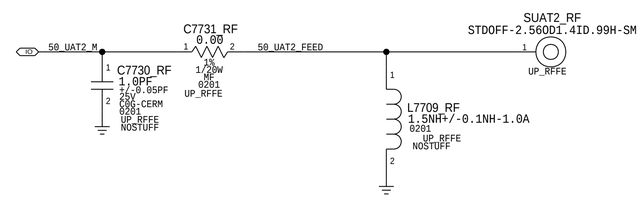

PAGE TITLE	UAT MATCH & TUNER
Apple Inc.	DRAWING NUMBER 051-00542 SIZE D
	REVISION 5.0.0
NOTICE OF PROPRIETARY PROPERTY:	BRANCH
THE INFORMATION CONTAINED HEREIN IS THE PROPRIETARY PROPERTY OF APPLE INC. THE POSESSOR AGREES TO THE FOLLOWING: I TO MAINTAIN THIS DOCUMENT IN CONFIDENCE II NOT TO REPRODUCE OR COPY IT III NOT TO REVEAL OR PUBLISH IT IN WHOLE OR PART IV ALL RIGHTS RESERVED	PAGE 3 OF 3
	SHEET 78 OF 81

1. ALL RESISTANCE VALUES ARE IN OHMS, 0.1 WATT +/- 5%.
2. ALL CAPACITANCE VALUES ARE IN MICROFARADS.
3. ALL CRYSTALS & OSCILLATOR VALUES ARE IN HERTZ.

REV	ECN	DESCRIPTION OF REVISION	CK APPD / DATE
5	0006232160	ENGINEERING RELEASED	2016-05-16

D1X WIFI_MLB (PERENNIAL)
FEBRUARY 1, 2016

PDF PAGE	CSA PAGE	CONTENTS
2	76	PERENNIAL
3	77	WIFI FRONT-END

BOM OPTIONS:

D10_JP:

PART#	QTY	DESCRIPTION	REFERENCE DESIGNATOR(S)	CRITICAL	BOM OPTION
131S0648	1	CAP,CER,0.3PF,+/-0.05,01005	C7705_RF	CRITICAL	D10_JP
152S00029	1	IND,1.1NH,UH-Q,01005	R7703_RF	CRITICAL	D10_JP
131S0893	1	CAP,CER,0.2PF,+/-0.05,01005	C7706_RF	CRITICAL	D10_JP
117S0161	1	RES,MF,0 OHM,1/32W,01005	R7711_RF	CRITICAL	D10_JP
117S0161	1	RES,MF,0 OHM,1/32W,01005	R7702_RF	CRITICAL	D10_JP
152S1980	1	IND,1.0NH,UH-Q,01005	R7704_RF	CRITICAL	D10_JP
131S0404	1	CAP,3.9PF,+/-1.0PF,01005	R6711_RF	CRITICAL	D10_JP
152S2061	1	IND,7.5NH,UH-Q,01005	C6729_RF	CRITICAL	D10_JP
117S0161	1	RES,MF,0 OHM,1/32W,01005	R7700_RF	CRITICAL	D10_JP
152S2043	1	IND,6.2NH,UH-Q,01005	C7702_RF	CRITICAL	D10_JP
152S1998	1	IND, 0.8NH,UH-Q,01005	L7700_RF	CRITICAL	D10_JP
152S2043	1	IND,6.2NH,UH-Q,01005	L7701_RF	CRITICAL	D10_JP
117S0161	1	RES,MF,0 OHM,1/32W,01005	R7701_RF	CRITICAL	D10_JP

NOSTUFF:C7729_RF,C7711_RF,C7709_RF,C7710_RF, C7707_RF, C7708_RF
C7700_RF, C7703_RF,C7704_RF

D10_ROW:

PART#	QTY	DESCRIPTION	REFERENCE DESIGNATOR(S)	CRITICAL	BOM OPTION
131S0648	1	CAP,CER,0.3PF,+/-0.05,01005	C7705_RF	CRITICAL	D10_ROW
152S00029	1	IND,1.1NH,UH-Q,01005	R7703_RF	CRITICAL	D10_ROW
131S0893	1	CAP,CER,0.2PF,+/-0.05,01005	C7706_RF	CRITICAL	D10_ROW
117S0161	TRUE	RES,MF,0 OHM,1/32W,01005	R7711_RF	CRITICAL	D10_ROW
117S0161	TRUE	RES,MF,0 OHM,1/32W,01005	R7702_RF	CRITICAL	D10_ROW
152S1988	TRUE	IND,2.4NH,UH-Q,01005	R7704_RF	CRITICAL	D10_ROW
117S0161	TRUE	RES,MF,0 OHM,1/32W,01005	R6711_RF	CRITICAL	D10_ROW
152S1853	TRUE	IND,9.1NH,UH-Q,01005	C6729_RF	CRITICAL	D10_ROW
117S0161	TRUE	RES,MF,0 OHM,1/32W,01005	R7700_RF	CRITICAL	D10_ROW
152S2043	1	IND,6.2NH,UH-Q,01005	C7702_RF	CRITICAL	D10_ROW
152S1998	1	IND, 0.8NH,UH-Q,01005	L7700_RF	CRITICAL	D10_ROW
152S2043	TRUE	IND,6.2NH,UH-Q,01005	L7701_RF	CRITICAL	D10_ROW
117S0161	1	RES,MF,0 OHM,1/32W,01005	R7701_RF	CRITICAL	D10_ROW

NOSTUFF:C7729_RF,C7711_RF,C7709_RF,C7710_RF, C7707_RF, C7708_RF
C7700_RF, C7703_RF,C7704_RF

D101_WIFI:

PART#	QTY	DESCRIPTION	REFERENCE DESIGNATOR(S)	CRITICAL	BOM OPTION
131S0648	1	CAP,CER,0.3PF,+/-0.05,01005	C7705_RF	CRITICAL	D101
152S00029	1	IND,1.1NH,UH-Q,01005	R7703_RF	CRITICAL	D101
131S0893	1	CAP,CER,0.2PF,+/-0.05,01005	C7706_RF	CRITICAL	D101
117S0161	1	RES,MF,0 OHM,1/32W,01005	R7711_RF	CRITICAL	D101
117S0161	1	RES,MF,0 OHM,1/32W,01005	R7702_RF	CRITICAL	D101
152S1988	TRUE 1	IND,2.4NH,UH-Q,01005	R7704_RF	CRITICAL	D101
131S0648	TRUE 1	CAP,CER,0.3PF,+/-0.05PF,01005	C7708_RF	CRITICAL	D101
118S0724	TRUE 1	RES,MF, 0 OHM,1/20W, 0201	R6711_RF	CRITICAL	D101
152S2054	TRUE 1	IND,9.1NH,UH-Q,0201	C6729_RF	CRITICAL	D101
117S0161	1	RES,MF,0 OHM,1/32W,01005	R7700_RF	CRITICAL	D101
152S2043	TRUE 1	IND,6.2NH,UH-Q,01005	C7702_RF	CRITICAL	D101
152S1998	1	IND, 0.8NH,UH-Q,01005	L7700_RF	CRITICAL	D101
152S2043	1	IND,6.2NH,UH-Q,01005	L7701_RF	CRITICAL	D101
117S0161	1	RES,MF,0 OHM,1/32W,01005	R7701_RF	CRITICAL	D101

NOSTUFF: C7729_RF,C7711_RF,C7709_RF,C7710_RF, C7707_RF
C7700_RF, C7703_RF,C7704_RF

D11_JP:

PART#	QTY	DESCRIPTION	REFERENCE DESIGNATOR(S)	CRITICAL	BOM OPTION
152S00273	TRUE	IND,0.6NH,UH-Q,01005	R7703_RF	CRITICAL	D11_JP
152S1976	TRUE	IND,0.7NH,UH-Q,01005	R7711_RF	CRITICAL	D11_JP
131S0400	TRUE	CAP,CER,3.5PF+/-0.1,01005	R7702_RF	CRITICAL	D11_JP
152S1986	TRUE	IND,FILM,2.2NH,UH-Q,01005	R7704_RF	CRITICAL	D11_JP
131S0648	TRUE	CAP,CER,0.3PF,+/-0.05PF,01005	C7708_RF	CRITICAL	D11_JP
131S0593	TRUE	CAP,3.9PF,+/-1.0PF,0201,HI-Q	R6711_RF	CRITICAL	D11_JP
152S2055	TRUE	IND,7.5NH,UH-Q,0201	C6729_RF	CRITICAL	D11_JP
117S0161	TRUE	RES,MF,0 OHM,1/32W,01005	R7700_RF	CRITICAL	D11_JP
117S0161	TRUE	RES,MF,0 OHM,1/32W,01005	L7700_RF	CRITICAL	D11_JP
152S1853	TRUE	IND,9.1NH,UH-Q,01005	L7701_RF	CRITICAL	D11_JP
117S0161	TRUE	RES,MF,0 OHM,1/32W,01005	R7701_RF	CRITICAL	D11_JP
131S0893	TRUE	CAP,CER,0.2PF,+/-0.05PF,01005	C7705_RF	CRITICAL	D11_JP
131S0893	1	CAP,CER,0.2PF,+/-0.05PF,01005	C7729_RF	CRITICAL	D11_JP

NOSTUFF:C7706_RF, C7711_RF,C7709_RF,C7710_RF, C7707_RF
C7700_RF,C7702_RF, C7703_RF,C7704_RF

D11_ROW:

PART#	QTY	DESCRIPTION	REFERENCE DESIGNATOR(S)	CRITICAL	BOM OPTION
152S00273	1	IND,0.6NH,UH-Q,01005	R7703_RF	CRITICAL	D11_ROW
152S1976	1	IND,0.7NH,UH-Q,01005	R7711_RF	CRITICAL	D11_ROW
131S0400	1	CAP,CER,3.5PF+/-0.1,01005	R7702_RF	CRITICAL	D11_ROW
152S1986	TRUE 1	IND,FILM,2.2NH,UH-Q,01005	R7704_RF	CRITICAL	D11_ROW
118S0724	TRUE 1	RES,MF,0 OHM,1/20W,0201	R6711_RF	CRITICAL	D11_ROW
152S2054	TRUE 1	IND,9.1NH,UH-Q,0201	C6729_RF	CRITICAL	D11_ROW
117S0161	1	RES,MF,0 OHM,1/32W,01005	R7700_RF	CRITICAL	D11_ROW
117S0161	1	RES,MF,0 OHM,1/32W,01005	L7700_RF	CRITICAL	D11_ROW
152S1853	1	IND,9.1NH,UH-Q,01005	L7701_RF	CRITICAL	D11_ROW
117S0161	1	RES,MF,0 OHM,1/32W,01005	R7701_RF	CRITICAL	D11_ROW
131S0893	1	CAP,CER,0.2PF,+/-0.05PF,01005	C7705_RF	CRITICAL	D11_ROW
131S0893	1	CAP,CER,0.2PF,+/-0.05PF,01005	C7729_RF	CRITICAL	D11_ROW

NOSTUFF:C7706_RF,C7711_RF,C7709_RF,C7710_RF, C7707_RF, C7708_RF
C7700_RF,C7702_RF, C7703_RF,C7704_RF

D111_WIFI:

PART#	QTY	DESCRIPTION	REFERENCE DESIGNATOR(S)	CRITICAL	BOM OPTION
152S00273	1	IND,0.6NH,UH-Q,01005	R7703_RF	CRITICAL	D111
152S1976	1	IND,0.7NH,UH-Q,01005	R7711_RF	CRITICAL	D111
131S0400	1	CAP,CER,3.5PF+/-0.1,01005	R7702_RF	CRITICAL	D111
152S1986	TRUE 1	IND,FILM,2.2NH,UH-Q,01005	R7704_RF	CRITICAL	D111
118S0724	TRUE 1	RES,MF, 0 OHM,1/20W, 0201	R6711_RF	CRITICAL	D111
152S2054	TRUE 1	IND,9.1NH,UH-Q,0201	C6729_RF	CRITICAL	D111
117S0161	1	RES,MF,0 OHM,1/32W,01005	R7700_RF	CRITICAL	D111
117S0161	1	RES,MF,0 OHM,1/32W,01005	L7700_RF	CRITICAL	D111
152S1853	1	IND,9.1NH,UH-Q,01005	L7701_RF	CRITICAL	D111
117S0161	1	RES,MF,0 OHM,1/32W,01005	R7701_RF	CRITICAL	D111
131S0893	1	CAP,CER,0.2PF,+/-0.05PF,01005	C7705_RF	CRITICAL	D111
131S0893	1	CAP,CER,0.2PF,+/-0.05PF,01005	C7729_RF	CRITICAL	D111

NOSTUFF:C7706_RF,C7711_RF,C7709_RF,C7710_RF, C7707_RF, C7708_RF
C7700_RF,C7702_RF, C7703_RF,C7704_RF

POWER

80 53 IN — PP_VDD_MAIN
80 53 IN — PP1V8_SDRAM

CLOCKS

80 53 IN — PMU_TO_WLAN_32K

CONTROL

80 53 IN — PMU_TO_WLAN_REG_ON
80 53 IN — PMU_TO_BT_REG_ON
80 53 OUT — BT_TO_PMU_HOST_WAKE
80 53 IN — AP_TO_BT_WAKE

WLAN PCIE

80 53 IN — 100_PCIE_AP_TO_WLAN_REFCLK_P
80 53 IN — 100_PCIE_AP_TO_WLAN_REFCLK_N
80 53 IN — 100_PCIE_AP_TO_WLAN_TX_P
80 53 IN — 100_PCIE_AP_TO_WLAN_TX_N
80 53 OUT — 100_PCIE_WLAN_TO_AP_RX_P
80 53 OUT — 100_PCIE_WLAN_TO_AP_RX_N
80 53 IN — PCIE_AP_TO_WLAN_PERST_L
2 IO — PCIE_AP_BI_WLAN_CLKREQ_L
80 53 OUT — PCIE_WLAN_TO_PMU_WAKE
80 53 IN — AP_TO_WLAN_DEV_WAKE

WLAN UART

80 53 OUT — UART_WLAN_TO_AP_RXD
80 53 IN — UART_AP_TO_WLAN_TXD
80 53 OUT — UART_WLAN_TO_AP_CTS_L
80 53 IN — UART_AP_TO_WLAN_RTS_L

BLUETOOTH UART

80 53 IN — UART_AP_TO_BT_TXD
80 53 OUT — UART_BT_TO_AP_RXD
80 53 IN — UART_AP_TO_BT_RTS_L
80 53 OUT — UART_BT_TO_AP_CTS_L

AOP

80 53 IN — AOP_TO_WLAN_CONTEXT_A
80 53 IN — AOP_TO_WLAN_CONTEXT_B

AUDIO

80 53 IN — I2S_AP_TO_BT_BCLK
80 53 IN — I2S_AP_TO_BT_LRCK
80 53 OUT — I2S_BT_TO_AP_DIN
80 53 IN — I2S_AP_TO_BT_DOUT

COEX

80 53 IN — UART_BB_TO_WLAN_COEX
80 53 OUT — UART_WLAN_TO_BB_COEX

ANTENNA

3 IO — 50_UAT_WLAN_5G_WEST
3 IO — 50_UAT_WLAN_2G_EAST
3 IO — 50_UAT_WLAN_5G_EAST
2 IO — 50_WLAN_G_1
2 IO — 50_WLAN_A_1
3 IO — 50_UAT2_M

WIFI_MLB SCHEMATIC

DRAWING TITLE	SCH,MLB,D111
Apple Inc.	DRAWING NUMBER 051-00542 / SIZE D
	REVISION 5.0.0
	BRANCH
	PAGE 1 OF 77
	SHEET 79 OF 81

NOTICE OF PROPRIETARY PROPERTY:
THE INFORMATION CONTAINED HEREIN IS THE PROPRIETARY PROPERTY OF APPLE INC.
THE POSESSOR AGREES TO THE FOLLOWING:
I TO MAINTAIN THIS DOCUMENT IN CONFIDENCE
II NOT TO REPRODUCE OR COPY IT
III NOT TO REVEAL OR PUBLISH IT IN WHOLE OR PART
IV ALL RIGHTS RESERVED

CONFIDENTIAL AND PROPRIETARY APPLE SYSTEM DESIGN. FOR REFERENCE PURPOSE ONLY - NOT A CHANGE REQUEST

WIFI/BT

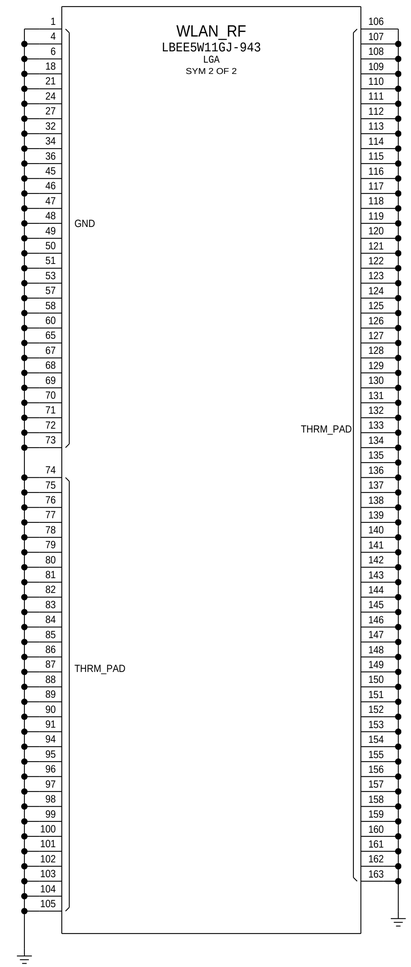

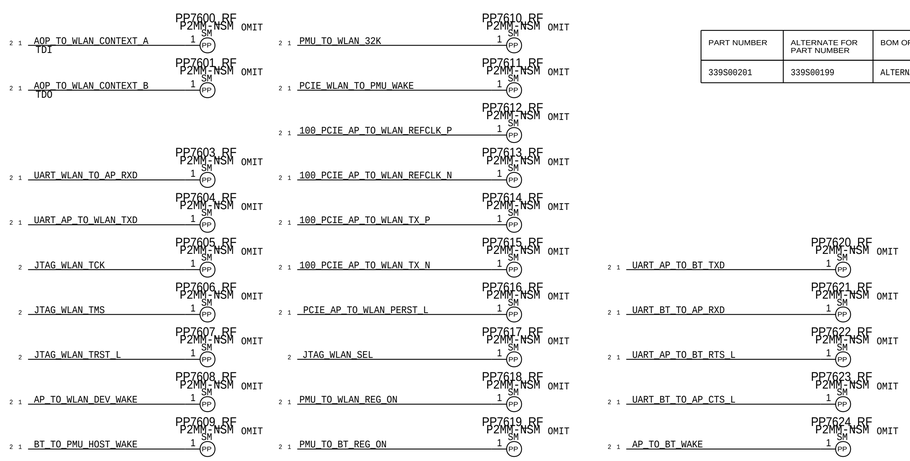

PART NUMBER	ALTERNATE FOR PART NUMBER	BOM OPTION	REF DES	COMMENTS:
339S00201	339S00199	ALTERNATE	WLAN_RF	ALT WIFI/BT MODULE

SYNC_MASTER=WIFI SYNC_DATE=01/30/2014

PAGE TITLE

PERENNIAL

Apple Inc.

DRAWING NUMBER 051-00542 SIZE D

REVISION 5.0.0

BRANCH

PAGE 76 OF 77

SHEET 80 OF 81

NOTICE OF PROPRIETARY PROPERTY:

THE INFORMATION CONTAINED HEREIN IS THE PROPRIETARY PROPERTY OF APPLE INC.
THE POSESSOR AGREES TO THE FOLLOWING:
I TO MAINTAIN THIS DOCUMENT IN CONFIDENCE
II NOT TO REPRODUCE OR COPY IT
III NOT TO REVEAL OR PUBLISH IT IN WHOLE OR PART
IV ALL RIGHTS RESERVED

WIFI UPPER ANTENNA FEEDS

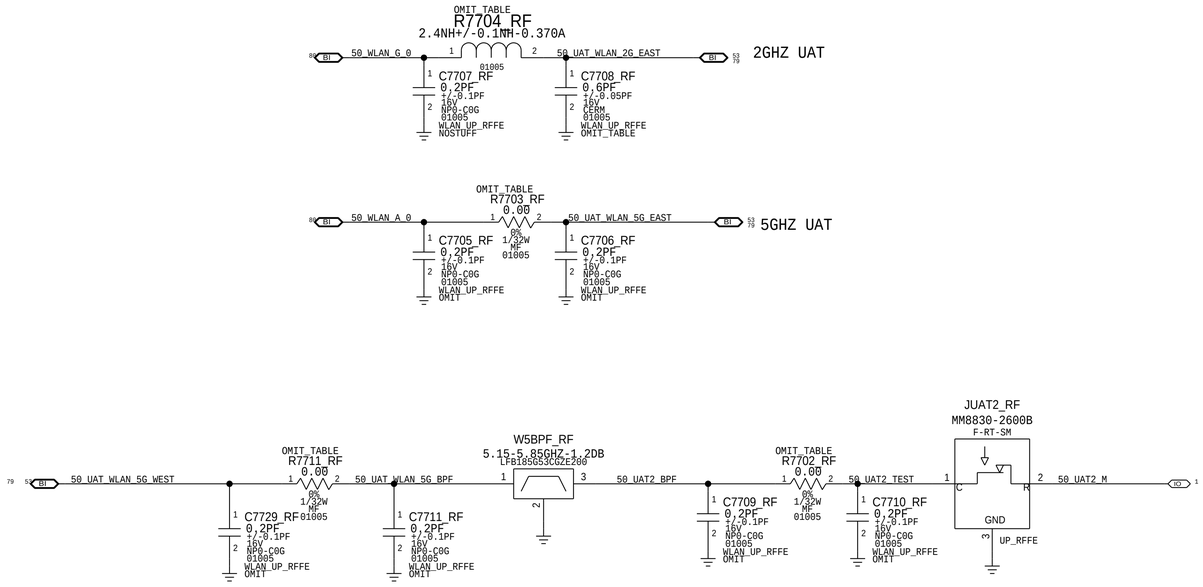

PAGE TITLE	WIFI FRONT-END [77]
	Apple Inc.
DRAWING NUMBER	051-00542
SIZE	D
REVISION	5.0.0
BRANCH	
PAGE	77 OF 77
SHEET	81 OF 81

NOTICE OF PROPRIETARY PROPERTY:

THE INFORMATION CONTAINED HEREIN IS THE PROPRIETARY PROPERTY OF APPLE INC.
THE POSESSOR AGREES TO THE FOLLOWING:
I TO MAINTAIN THIS DOCUMENT IN CONFIDENCE
II NOT TO REPRODUCE OR COPY IT
III NOT TO REVEAL OR PUBLISH IT IN WHOLE OR PART
IV ALL RIGHTS RESERVED